SCHNEEBERGER
LINEAR TECHNOLOGY

LINEAR BEARINGS

and Recirculating Units

SCHNEEBERGER
LINEAR TECHNOLOGY

Table of Contents

1 Product Overview . . . . . • 6
NEW: FORMULA-S

2 Applications
2.1 Linear Bearings for a Universal Tool Grinding Machine Table . . . . . • 10
2.2 Grinding Table Mounting on an Internal Grinder . . . . . • 10
2.3 Non pre-loaded Anti-friction Guideway for Heavy Duty Flat Grinder . . . . . • 11
2.4 Closed V-Guides for Flat Grinding Machine . . . . . • 12
2.5 V-Guide for Heavy Duty Tool Grinding Machines . . . . . • 13
2.6 Delivery Unit in Nuclear Industry. . . . . • 14

3 Linear Bearings Type RN
3.1 Linear Bearings Type RN . . . . . • 15
3.2 Material . . . . . • 15
3.3 Special version . . . . . • 15
3.4 Dimension Table Type RN . . . . . • 16

4 Linear Bearings Type RNG
4.1 Linear Bearings Type RNG. . . . . • 19
4.2 Material . . . . . • 19
4.3 Special version . . . . . • 19
4.4 Dimension Table Type RNG . . . . . • 20

5 Linear Bearings Type R
5.1 Linear Bearings Type R . . . . . • 23
5.2 Material . . . . . • 23
5.3 Special version . . . . . • 23
5.4 Dimension Table Type R. . . . . • 24

6 Linear Bearings Type RD
6.1 Linear Bearings Type RD . . . . . • 27
6.2 Material . . . . . • 27
6.3 Special version . . . . . • 27
6.4 Dimension Table Type RD . . . . . • 28

7 Accessories Type RN, RNG, R, RD
7.1 Cages . . . . . • 30
7.2 Endpieces . . . . . • 32
7.3 Attaching Screws. . . . . • 34
7.4 Endscrews. . . . . • 34

8 Linear Bearings Type N and O
8.1 Linear Bearings Type N and O . . . . . • 35
8.2 Material . . . . . • 35
8.3 Special version . . . . . • 35
8.4 Dimension Table Type N/O. . . . . • 36

9 Linear Bearings Type M and V
9.1 Linear Bearings Type M and V . . . . . • 39
9.2 Material . . . . . • 39
9.3 Special version . . . . . • 39
9.4 Dimension Table Type M/V. . . . . • 40

10 Accessories Type N/O and M/V
10.1 Cages . . . . . • 42
10.2 Endpieces for N/O . . . . . • 43
10.3 Endpieces for M/V . . . . . • 44

11 Recirculating Unit Type SK and SKD
11.1 Recirculating Type SK and SKD . . . . . • 45
11.2 Material . . . . . • 45
11.3 Dimension Table SK and SKD . . . . . • 46
11.4 Fitting dimensions . . . . . • 48
11.5 Permissible moments . . . . . • 48

12 Recirculating Unit Type SKC
12.1 Recirculating Unit Type SKC . . . . . • 49
12.2 Material . . . . . • 49

13 Recirculating Unit Type SR
13.1 Recirculating Unit Type SR . . . . . • 51
13.2 Material . . . . . • 51
13.3 Dimension Table Type SR . . . . . • 52
13.4 Fitting dimensions . . . . . • 54
13.5 Permissible moments . . . . . • 54

14 Recirculating Unit Type NRT
14.1 Recirculating Unit Type NRT and Preload Wedge Type NRV . . . . . • 55
14.2 Material . . . . . • 55
14.3 Standard version . . . . . • 55
14.4 Dimension Table Type NRT and NRV . . . . . • 56
14.5 Special version . . . . . • 58
14.6 Preload Adjustment . . . . . • 58

15 Technical Information
15.1 Tolerances . . . . . • 59
15.2 Materials . . . . . • 61
15.3 Permissible Operating Temperatures . . . . . • 61
15.4 Lubrication . . . . . • 62
15.5 Permissible Velocities and Accelerations . . . . . • 62
15.6 Sealing and Guarding . . . . . • 63
15.7 Friction, Running Accuracy and Smoothness . . . . . • 63

16 Design and Fitting Guidelines
16.1 Types of Fitting . . . . . • 64
16.2 Attaching Linear Bearings and Recirculating Units . . . . . • 66
16.3 Preloading Linear Bearings . . . . . • 68
16.4 Design of Base Unit . . . . . • 71
16.5 Design of Seals and Guards . . . . . • 74
16.6 Assembly . . . . . • 77
16.7 Layout of SCHNEEBERGER Linear Bearings and Recirculating Units . . . . . • 79

17 Dimensioning
17.1 Load Carrying Capacity and Operational Life . . . . . • 83
17.2 Elastic Deformation and Rigidity . . . . . • 86
17.3 The Essentials Summarized . . . . . • 88

18 Calculation Examples
18.1 Load carrying capacity and operational life . . . . . • 90

19 Ordering Information . . . . . • 98

1 Product Overview

Linear Bearings
SCHNEEBERGER linear bearings are renowned for high accuracy, reliability and excellent operating characteristics. A wide range of differing guides is available which, acording to the application, may be fitted with balls, needles or rollers. This large selection of guides and rolling elements permits the user to select the optimum guidance concept. By employing SCHNEEBERGER linear bearings the user can call on experience and technical knowledge accumulated and extended over decades. There has been ongoing development of linear bearings by a team of engineers at SCHNEEBERGER for over forty years. New findings from research and development are being constantly processed and applied to existing and new products.
In this chapter you will find SCHNEEBERGER linear bearings with cages for designs with limited strokes. Construction with an unlimited stroke can be realized using recirculating units (chapter 11 onwards).

New: Cage assist FORMULA-S
FORMULA-S was developed to survive the most difficult situations: high acceleration/deceleration, rapid oscillation, vertical installation, etc. The cage remains perfectly centered – in all cases, in all assembly orientations.
FORMULA-S is available for the linear guideways type RN and RNG.

Types/Sizes
RN 3, RN 4, RN 6
RNG 4, RNG 6

Lengths
50 to 1500 mm

Accessories
- Cage: KBS

Linear Bearings Type RN
The RN linear bearing represents a consistent optimization of the R linear bearing. Thanks to the enlarged contact surface of the roller with the guideway, the performance capacitiy is significantly increased, with unchanged fitting dimensions.
The features of the RN include:
– approx. 3 × higher load carrying capacity
– significantly reduced susceptibility to cage drift
– reduced danger of contamination due to narrower gap between individual guides

Sizes
3, 4, 6, 9, 12

Lengths
50 to 1500 mm

Accessories
- Cage: KBN
- Endpieces: GA and GAN
- Special Attaching Screws: GD
- Cage assist FORMULA-S

Linear Bearings Type RNG
The RNG linear bearing is a modern, high-performance design and was created through the consistent optimization of the R type bearing. Highly loadable guidance systems with the smallest dimensions can be realized. Through the high performance with comparably small bearing cross-sections, an unrivalled economic efficiency results in many applications.

Sizes
4, 6, 9, 12

Lengths
50 to 1500 mm

Accessories
- Cage: KBN
- Endpieces: GBN, GCN, GCN-A
- Special Attaching Screws: GDN
- Cage assist FORMULA-S

Linear Bearings Type R
With the type R, SCHNEEBERGER introduced the first standardized linear bearing in the world. Today it is recognized as an industrial standard. The bearing can be used with rollers or balls and is suitable for many applications with medium to high demands. Combined with SCHNEEBERGER recirculating units, configurations with an unlimited stroke are feasible.

Sizes
1, 2, 3, 6, 9, 12

Lengths
20 to 1500 mm

Accessories
- Cages: AC, AK, EE
- Recirculation Units: SR, SK, SKC, SKD
- Endpieces: GA, GB, GC, GC-A
- Special Attaching Screws: GD

Linear Bearings Type RD
The RD linear bearing complements the R type by providing space-saving solutions. In addition, the use of R and RD linear bearings provides a substantially more economical guidance concept in the user's construction.
Combined with SCHNEEBERGER recirculating units, configurations with an unlimited stroke are feasible.

Sizes
1, 2, 3, 6, 9, 12

Lengths
100 to 2000 mm

Accessories
- Cages: AC, AK
- Recirculation Units: SR, SK, SKC, SKD

Linear Bearings Type N/O
The N/O linear bearing has been designed for use with needle cages. These anti-friction guideways are suitable for high-load applications. Together with the closely arranged needle cage the bearing has a very high rigidity. The SCHNEEBERGER plastic and steel composite cage used in these guides gives less resistance to motion than similar needle cages.

Sizes
62015, 92025, 2025, 2535, 3045, 3555

Lengths
100 to 2000 mm

Accessories
- Cages: SHW, HW
- Endpieces: GFN, GFO, GH, GH-A, GW, GW-A
- Special Attaching Screws: GD

Linear Bearings Type M/V
Type M/V linear bearings are equipped with needle cages and are suitable for high load applications. The SCHNEEBERGER composite cages used with these guides ensure that there is little resistance to motion as compared to other similar needle bearing guides, while providing very great rigidity.

Sizes
3015, 4020, 5025, 6035, 7040, 8050

Lengths
100 to 1500 mm

Accessories
- Cages: SHW, HW
- Endpieces: EM, EV, EAM, EAV

Recirculating Units

SCHNEEBERGER Recirculating Units are Linear Guidance Systems for Unlimited Stroke Lengths. According to the model and loading, balls or rollers are used which are returned internally, load-free, so that continuous motion is ensured. They are characterized by:
– Low pulsation and low friction
– High load carrying capacity and rigidity
– Great precision
A restriction in the stroke is actually only given by the length of the guideways used.
SCHNEEBERGER recirculating units are used for anti-friction guideways among other things in robotics, in the construction of machinery in general and in measuring instruments i. e. everywhere where medium to high demands are placed on the accuracy of the system.

Ball Recirculating Units Type SK and SKD
The type SK recirculating unit is equipped with balls and is suitable for low to medium loading. It is used with SCHNEEBERGER type R or RD linear bearings and can be uniformly loaded in every direction. Hence, space saving designs may be realized.
Some sizes can be additionally fitted with damping elements (type designation SKD). These provide smoother operation but also have a somewhat reduced load carrying capacity.

Sizes
1, 2, 3, 6, 9, 12

Lengths
22 to 200 mm

Ball Recirculating Unit Type SKC
The recirculating unit type SKC provides unlimited stroke and equal load carrying capacity in all directions. The SKC, designed for low-to-medium loading conditions, operates dry – lubrication is not required!
These units, used with SCHNEEBERGER linear bearings type R or RD, are drop-in replacements for SCHNEEBERGER SK and SR recirculating units.
The combination of coated stainless steel, ceramic and Teflon® makes this recirculating unit suitable for **lubrication free operation in high vacuum and clean room applications.**

Sizes
3, 6

Lengths
SKC 3075 = 75 mm
SKC 6100 = 100 mm

SKC

Roller Recirculating Unit Type SR
The SR recirculating unit has cross rollers and is suitable for medium to high loading. Dimensionally interchangeable with type SK, the type SR is also used with SCHNEEBERGER type R or RD linear bearings, but offers greater load carrying capacity and rigidity.

Sizes
2, 3, 6, 9, 12

Lengths
32 to 200 mm

Size 2

Sizes 3, 6, 9, 12

Flat Roller Recirculating Units Type NRT and NRV
The roller recirculating units NRT are designed for medium to heavy loads, high rigidity and high precision. Together with suitable SCHNEEBERGER linear bearings, adjusting wedge or attaching part ingenious constructions can be realized.

Sizes
19077, 26111, 38144

Lengths
77 to 144 mm

Accessories

Preload Wedge Type NRV
These wedges are used normally to adjust the preload. At the same time, by suitably shaping the cylindrically ground wedge bars, small angular deviations and deformations in the surrounding construction can be compensated.
The parts are made from hardened steel.

NRT

NRV

2 Applications

2.1 Linear Bearings for a Universal Tool Grinding Machine Table

Sensitive grinding on tool grinding machines requires a stick-slip-free and low friction antifriction guideway for the lengthwise motion of the table. Only then is it possible to achieve a uniform grinding wheel cut over the whole of the working stroke, since certain jobs are carried out without handwheel or crank. Especially on grinding machines it is also necessary to protect the linear guides because they can be damaged by the effects of dust and coolant. Covers which wipe or rub are not possible here because of the demand for low friction.

SCHNEEBERGER Products Used

«Pre-loaded» system

1 4 Linear bearings R 9 800
2 2 Roller cages AC 9×33 rollers
8 End pieces GB 9

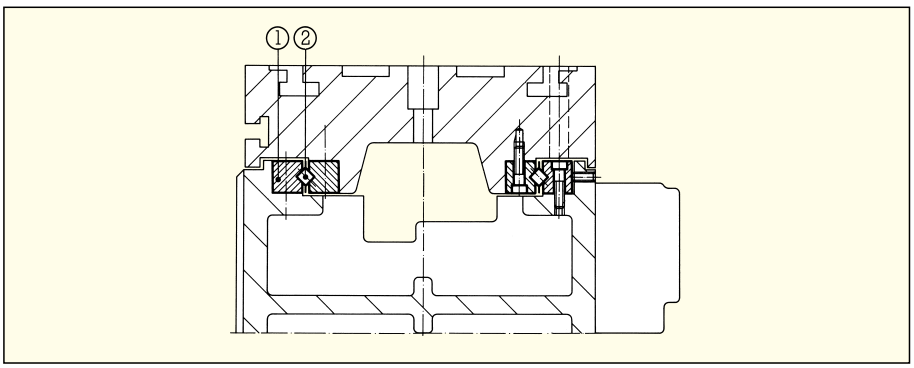

2.2 Grinding Table Mounting on an Internal Grinder

This high tech internal grinding machine required absolutely playfree, pre-loaded table guides in order to meet the high requirements of present day grinding techniques. To conform to these demands the base construction and the grinding table are box sectioned and ribbed, thus providing great torsional restistance and stability. In addition, coolant and grinding dust presented problems with regard to properly sealing the guide systems.

SCHNEEBERGER's Suggested Solution

The grinding table is mounted on N/O linear bearings and their V-shaped needle cages are attached to an oil pulse lubrication system. This configuration permits the high table speeds to be governed with the smallest possible amount of force. Pre-loaded attachment permitted minimum feed movements and ensured close tolerances because of playfree operation. Sealing the bearings was effected by making the drip pans at the sides of the table in the form of labyrinth seals. The table has a stroke of 550 mm and its maximum speed is 14 m/min.

SCHNEEBERGER Products Used

1 2 Linear bearings O 2535 1000
2 2 Linear bearings N 2535 1000
3 2 Needle cages HW 20×725
4 Endpieces GH 2535 without wipers

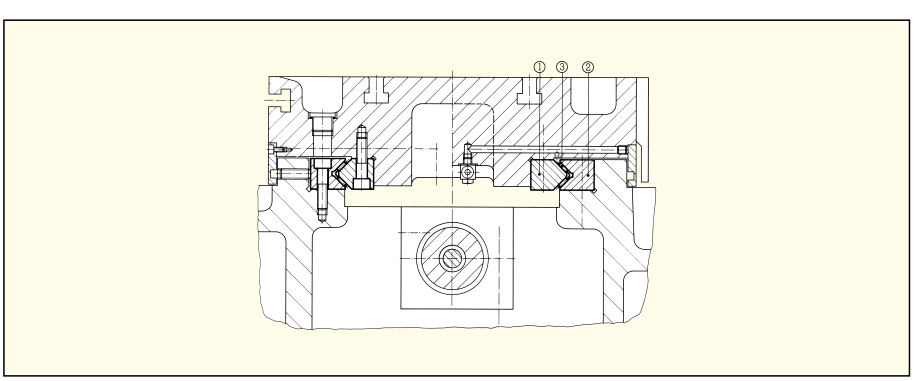

2.3 Non pre-loaded Anti-friction Guideway for Heavy Duty Flat Grinder

Gravity loaded, non pre-loaded anti-friction guideways are used in many flat grinding machines and in particular those with heavy tables and heavy workpieces. The table and workpiece weight plus the grinding pressure act vertically on the guideways; therefore, it is natural to use gravity loaded anti-friction guideways.
Economy, ease of assembly and high operational accuracy are the features of this layout. Table expansion as the result of heat effects (magnetic table; coolant) is compensated for by free expansion in two directions and, as a result, geometric errors cannot occur. The guideways are lubricated with grease. The wipers, not visible in the drawing, keep the bearings free from foreign matter and the lubricant loss to a minimum.

SCHNEEBERGER's Suggested Solution
The first solution is simple and economical. The V-Type guideways provide the table with lateral guidance. The special guideways are aligned at the height of the Type N/O V-bearings. The customer could thereby interchange the systems according to whether the grinding spindle was attached on the l. h. or r. h. side.
Machining the attaching surfaces was easier because they were at the same height and had the same drilling pattern. This type of guidance system requires no further preloading.

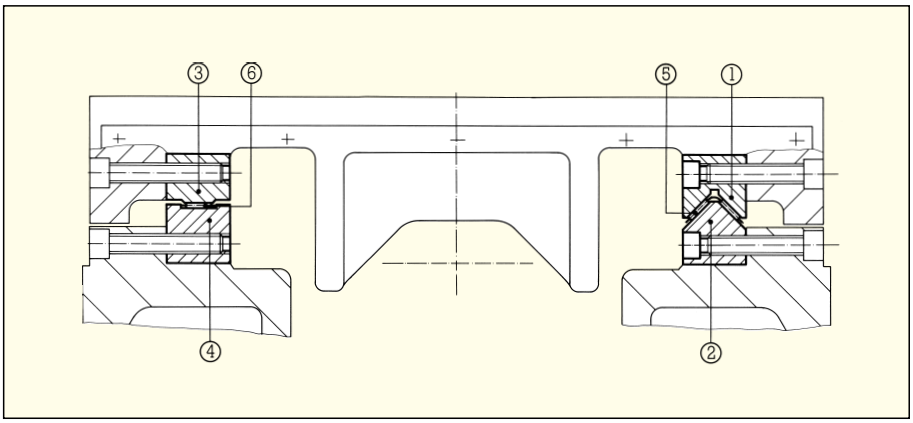

SCHNEEBERGER Products Used
1 1 Linear bearing N 3555-600 EG
2 1 Linear bearing O 3555-1000
3 1 Linear bearing Spec. 45 × 35 × 600 EG
4 1 Linear bearing Spec. 45 × 42.5 × 1000
5 1 Cage SHW 30 × 810
6 1 Cage H 25 × 810
2 Endpieces GW 3555
2 Endpieces special

2.4 Closed V-Guides for Flat Grinding Machine

In addition to high accuracy and rigidity, the design layout of linear bearings for flat grinding machines is governed by economical aspects. The V-shaped rolling element layout provides a closed guide which can accept forces and moments from all directions. A low resistance to motion and low maintenance requirements are a matter of course. Drive units can be mounted under the center of the table. The few components permit quick and simple assembly as there are only a few screws to be tightened to set the pre-load. The stroke in this case is 340 mm.

SCHNEEBERGER's Suggested Solution

The stroke/table length relationship is optimal for the use of anti-friction guideways.
The base surfaces of the inverted V linear bearings can be easily and accurately machined, since they lie in the same plane. These surfaces also enable high operating accuracy. Flange bars are not needed. Possible changes in pre-load can be effected easily with the freely accessible adjustment and attachment screws.

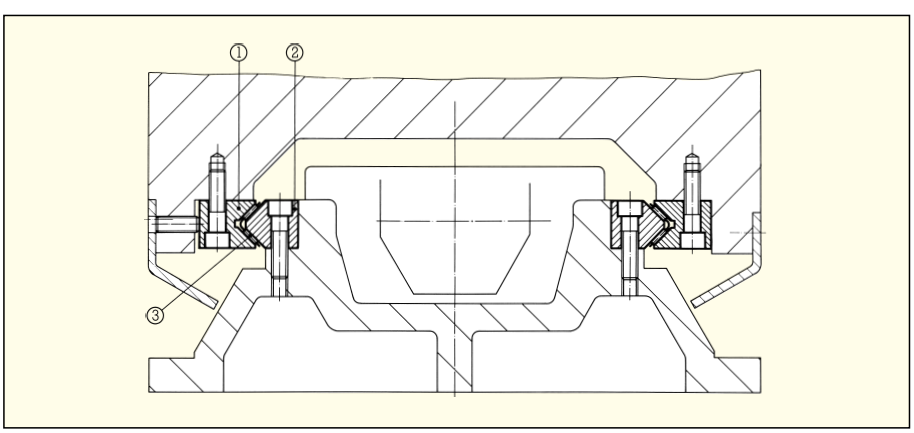

SCHNEEBERGER Products Used

1 2 Linear bearings N 3045-900
2 2 Linear bearings O 3045-900
3 2 Needle cages SHW 25×730
8 Endpieces GF 3045

2.5 V-Guide for Heavy Duty Tool Grinding Machines

Tool grinding machines place great demands on the anti-friction guideway systems in the machine table. High operating accuracy, low friction, absence of stick-slip effect and protected guideways are the main requirements. With present day deep grinding techniques and with the big sweep which is a feature of these machines, large moments are produced. They require a stiff stress-strain characteristic from the guidance system. Sliding wipers cannot be used because of the free running characteristic demanded.

SCHNEEBERGER's Suggested Solution

Because of their high load carrying capacity the RNG linear bearings used here are tailor-made for the job. The table design permits the location of the drive mechanisms and also easy mounting of the table top. Initial and subsequent pre-loading is a simple operation. The holes for tool access can be closed with screwed plugs. The anti-friction guideways are permanently lubricated and, therefore, need no maintenance.

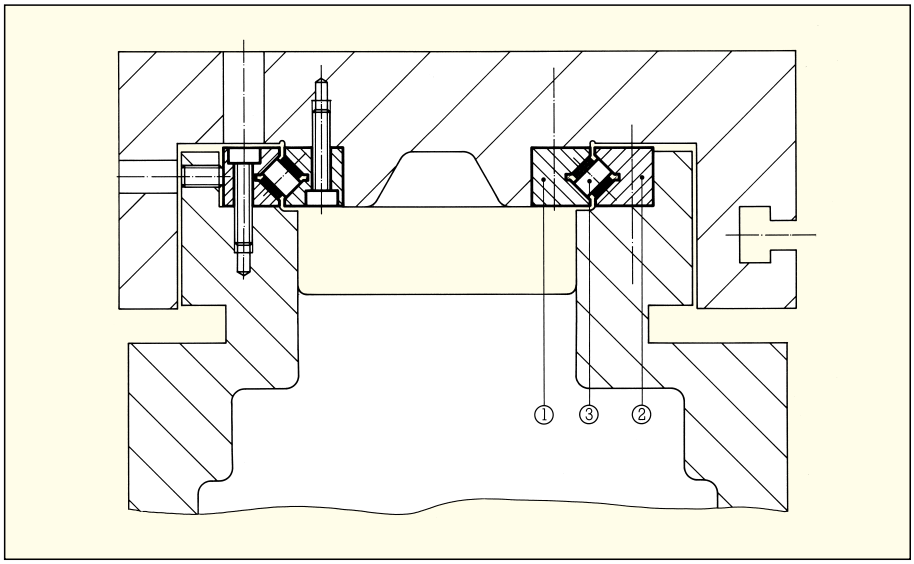

SCHNEEBERGER Products Used

1 2 Linear bearings RNG 9-700
2 2 Linear bearings RNG 9-450-EG
3 2 Roller cages KBN 9×43 rollers
4 Endpieces GCN 9

2.6 Delivery Unit in Nuclear Industry

The delivery unit, operating in a vacuum, places great demands on the guidance system. A U-shaped beam forms the main carrier which is, at the same time, the base for the linear bearings. The whole system is made of rustproof materials, operates vertically and has a stroke of 2700 mm. The operating speed is 3 m/min.

SCHNEEBERGER's Suggested Solution

Two Type R linear bearings mounted on the U-shaped base and 4 Type SK recirculating units compose the actual guideway system. Two of the four recirculating units can be regulated externally and, therefore, provide the best possible pre-load adjustment. All parts of the recirculating units are made of stainless steel, including the balls, or aluminium. The fact that the whole system has to run dry and that materials have to be rustfree means a reduction in load carrying capacity of approximately 50%.

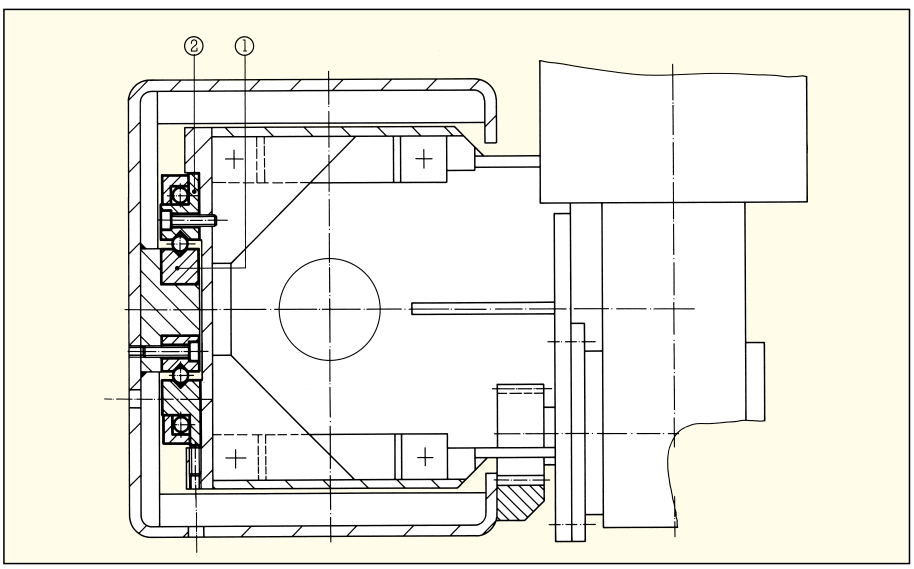

SCHNEEBERGER Products Used

1 16 Linear bearings R 9-400-RF-ZG (rustproof, ground together) to 3200 mm length
2 4 Recirculating units SK 9-150-RF (rustproof)

More applications are available on www.schneeberger.com in section SERVICES.

3.1 Linear Bearings Type RN

The RN linear bearing represents a consistent optimization of the R linear bearing. Thanks to the enlarged contact surface of the roller with the guideway, the performance capacity is significantly increased, with unchanged fitting dimensions.
The features of the RN include:
– approx. 3 × higher load carrying capacity
– significantly reduced susceptibility to cage drift
– reduced danger of contamination due to the narrower gap between the individual guides

3.2 Material

SCHNEEBERGER **linear bearings** are normally manufactured from tool steel No. 1.2510 or 1.2842. The hardness is between 58 and 62 HRC, or min. 54 HRC for certain corrosion resistant models (material No. 1.4125).
The whole SCHNEEBERGER **rolling element range** is made generally from bearing steel No. 1.3505. The hardness is between 58 and 64 HRC, or min. 56 HRC for corrosion-resistant models.

3.3 Special version

Also available in a special corrosion resistant material. The comprehensive standardized program is complemented as the situation requires with special models so that every desired, technically optimal design can be realized. We can supply complete solutions specific to the application conditions.

3.4 Dimension Table Type RN

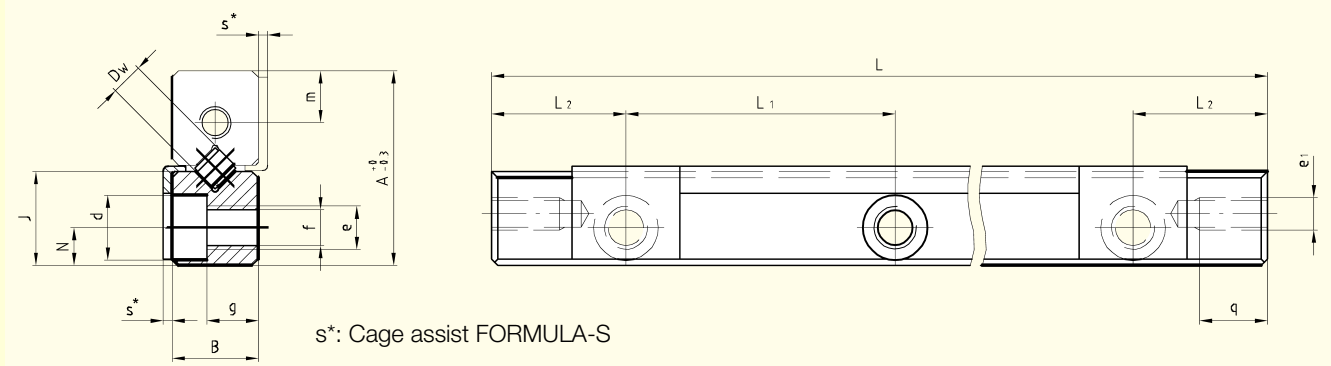

s*: Cage assist FORMULA-S

Type	Size	A	B	Dw	J	L_1	L_2	N	d	e	e_1	f	g	m	q	s
RN	**3**	18	8	3	8.7	25	12.5	3.5	6	M4	M3	3.3	4.8	4.8	7	0.85
RN	**4**	22	11	4.5	10.5	40	20	4.5	8	M5	M3	4.3	6.9	5.5	7	0.85
RN	**6**	31	15	6.5	14.8	50	25	6	9.5	M6	M5	5.2	9.8	7.5	9	0.85
RN	**9**	44	22	9	21.1	100	50	9	10.5	M8	M6	6.8	15.8	11.5	9	–
RN	**12**	58	28	12	27.6	100	50	12	13.5	M10	M8	8.5	19.8	15	12	–
RN 15, RN 18, RN 24 on request																

Type	Size	Length L											Max L
RN	**3**	**050**	**075**	**100**	**125**	**150**	**175**	**200**	**225**	**250**	**275**	**300**	700
RN	**4**	**080**	**120**	**160**	**200**	**240**	**280**	**320**	**360**	**400**			700
RN	**6**	**100**	**150**	**200**	**250**	**300**	**350**	**400**	**450**	**500**			1500
RN	**9**	**200**	**300**	**400**	**500**	**600**	**700**	**800**					1500
RN	**12**	**200**	**300**	**400**	**500**	**600**	**700**	**800**	**900**	**1000**			1500
Other lengths on request													

Cage KBN

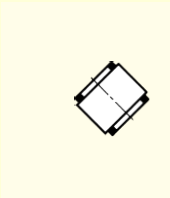

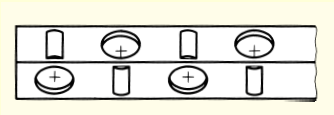

Cage KBS*

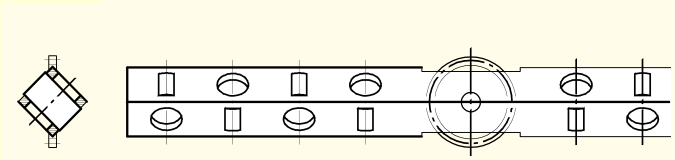

* for cage assist FORMULA-S

Type	**Size**	**Accessories** (see also chapter 7) Cages KBN	Endscrews GAN or GA	Spec. Attaching screws GD	**Options** SQ	SSQ	RF	EG	ZG	HA	DU	KS
RN	**3**	•	•	•	(•)	(•)	(•)	•	•	•	•	•
RN	**4**	•	•	•	(•)	(•)	(•)	•	•	•	•	•
RN	**6**	•	•	•	(•)	(•)	(•)	•	•	•	•	•
RN	**9**	•	•	•	(•)	(•)	(•)	•	•	•	•	
RN	**12**	•	•	•	(•)	(•)	(•)	•	•	•	•	
(•) Maximum length 600 mm												

Corrosion resistant rolling elements on request

Ordering information Linear Bearings

Standard

Type	Size	–	Length	–	Additional ordering information
RN	9	–	800	–	

Options

SQ	Special quality, high requirements [1]
SSQ	Super special quality, most stringent requirements [1]
RF	Corrosion resistant [2]
EG	Inlets rounded [3]
ZG	Linear Bearings ground together [1]
HA	Of Height Matched Linear Bearings in pairs [1]
DU	Chrome coating type Duralloy® [2]
KS	Integrated cages with assisted movement

Order information

4 Linear Bearings Type RN 9-800-SQ
2 Roller Cages KBN 9 x 30 rollers
8 Endpieces GA

[1] see chapter 15.1
[2] see chapter 15.2
[3] see chapter 16.7

4.1 Linear Bearings Type RNG

Type RNG linear bearings were created through the optimization of the R type. As a result of their new shape, they are more accurate, have greater load carrying capacity and rigidity and a longer operational life. This high performance linear bearing with its relatively small guidance cross-section yields matchless economy in many applications.

4.2 Material

SCHNEEBERGER **linear bearings** are normally manufactured from tool steel No. 1.2510 or 1.2842. The hardness is between 58 and 62 HRC, or min. 54 HRC for certain corrosion resistant models (material No. 1.4125).
The whole SCHNEEBERGER **rolling element range** is made generally from bearing steel No. 1.3505. The hardness is between 58 and 64 HRC, or min. 56 HRC for corrosion-resistant models.

4.3 Special version

The comprehensive standardized program is complemented as the situation requires with special models so that every desired, technically optimal design can be realized. We can supply complete solutions specific to the application conditions.

4.4 Dimension Table Type RNG

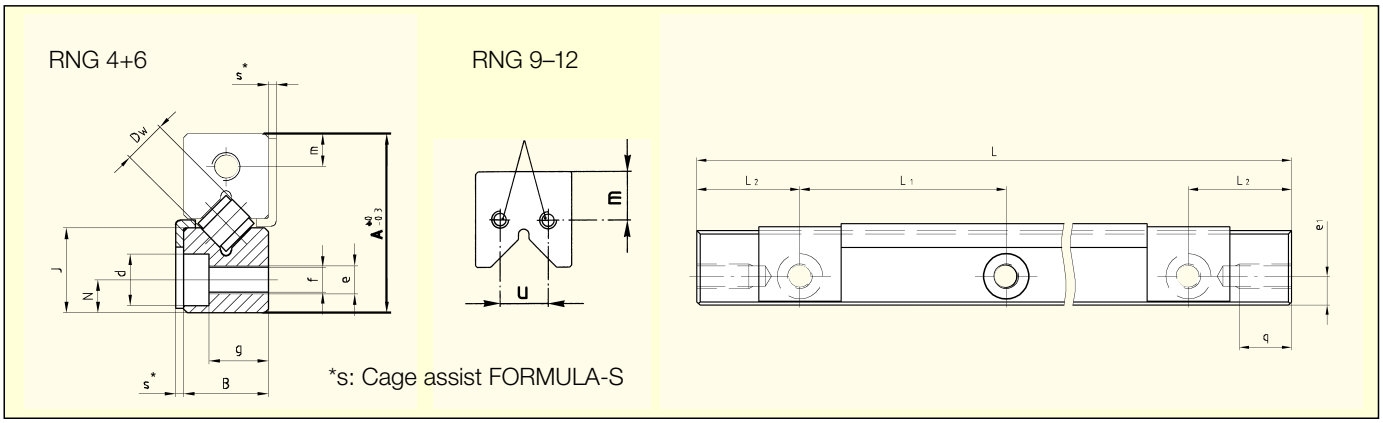

Type	Size	A	B	Dw	J	L_1	L_2	N	d	e	e_1	f	g	m	q	u	s
RNG	**4**	19	9	4.5	9	25	12.5	3.5	5.5	M3	M3	2.65	6.3	3.5	6	–	0.85
RNG	**6**	25	12	6.5	12	25	12.5	5	7	M4	M3	3.3	8.8	5	6	–	0.85
RNG	**9**	33	16	9	16	25	12.5	6	8.5	M5	M3	4.4	11.8	8	6	8	–
RNG	**12**	45	22	12	22	50	25	8	12	M8	M5	6.8	15.8	11	7.5	10	–

Type	Size	Length L											Max L
RNG	**4**	**050**	**075**	**100**	**125**	**150**	**175**	**200**	**225**	**250**	**275**	**300**	700
RNG	**6**	**100**	**150**	**200**	**250**	**300**	**350**	**400**					1500
RNG	**9**	**100**	**150**	**200**	**250**	**300**	**350**	**400**	**450**	**500**			1500
RNG	**12**	**200**	**300**	**400**	**500**	**600**	**700**	**800**	**900**	**1000**			1500
RNG 15, RNG 20 and other lengths on request													

Cage KBN

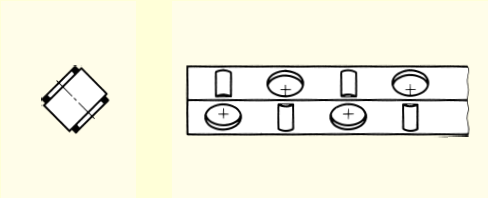

Cage KBS*

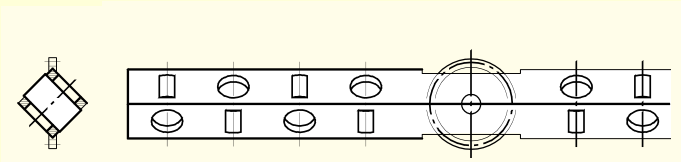

* for cage assist FORMULA-S

Type	Size	Accessories (see also chapter 7) Cages KBN	Endpieces GBN	GCN	GCN-A	Spec. Attaching Screws GDN	Options SQ	SSQ	RF	EG	ZG	HA	DU	KS
RNG	**4**	•	•	•	•	•	(•)	(•)	(•)	•	•	•	•	•
RNG	**6**	•	•	•	•	•	(•)	(•)	(•)	•	•	•	•	•
RNG	**9**	•	•	•	•	•	(•)	(•)	(•)	•	•	•	•	
RNG	**12**	•	•	•	•	•	(•)	(•)	(•)	•	•	•	•	
(•) Maximum length 600 mm														

Corrosion resistant rolling elements on request

Ordering information Linear Bearings

Standard

Type	Size	–	Length	–
RNG	9	–	400	–

Options

Additional ordering information
SQ Special quality, high requirements [1]
SSQ Super special quality, most stringent requirements [1]
RF Corrosion resistant [2]
EG Inlets rounded [3]
ZG Linear Bearings ground together [1]
HA Of Height Matched Linear Bearings in pairs [1]
DU Chrome coating type Duralloy® [2]
KS Integrated cages with assisted movement

Order information

4 Linear Bearings Type RNG 9-400
2 Roller Cages KBN 9 x 25 rollers
8 Endpieces GBN 9

[1] see chapter 15.1
[2] see chapter 15.2
[3] see chapter 16.7

5.1 Linear Bearings Type R

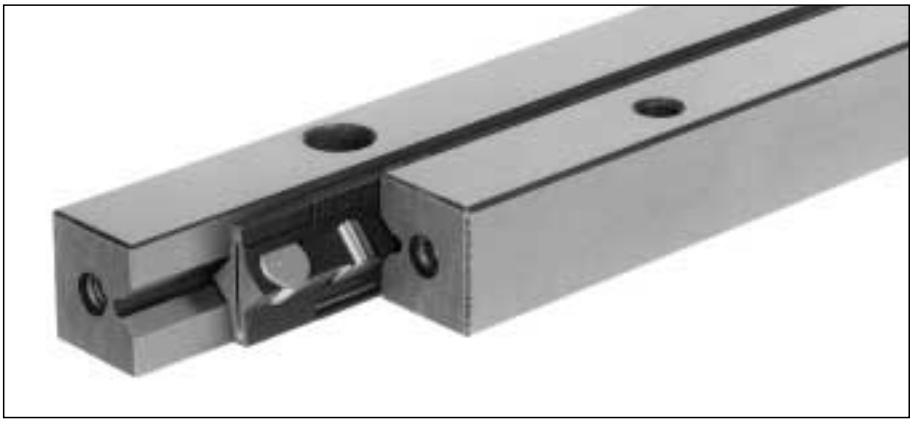

Type R linear bearings can be equipped with ball or roller cages and are suitable for applications involving medium to high demands. Further combinations are possible with type RD linear bearings and type SK, SKD, SR and SKC recirculating units.

5.2 Material

SCHNEEBERGER **linear bearings** are normally manufactured from tool steel No. 1.2510 or 1.2842. The hardness is between 58 and 62 HRC, or min. 54 HRC for certain corrosion resistant models (material No. 1.4125).
The whole SCHNEEBERGER **rolling element range** is made generally from bearing steel No. 1.3505. The hardness is between 58 and 64 HRC, or min. 56 HRC for corrosion-resistant models.

5.3 Special version

Also available in a special corrosion resistant material. The comprehensive standardized program is complemented as the situation requires with special models so that every desired, technically optimal design can be realized. We can supply complete solutions specific to the application conditions.

5.4 Dimension Table Type R

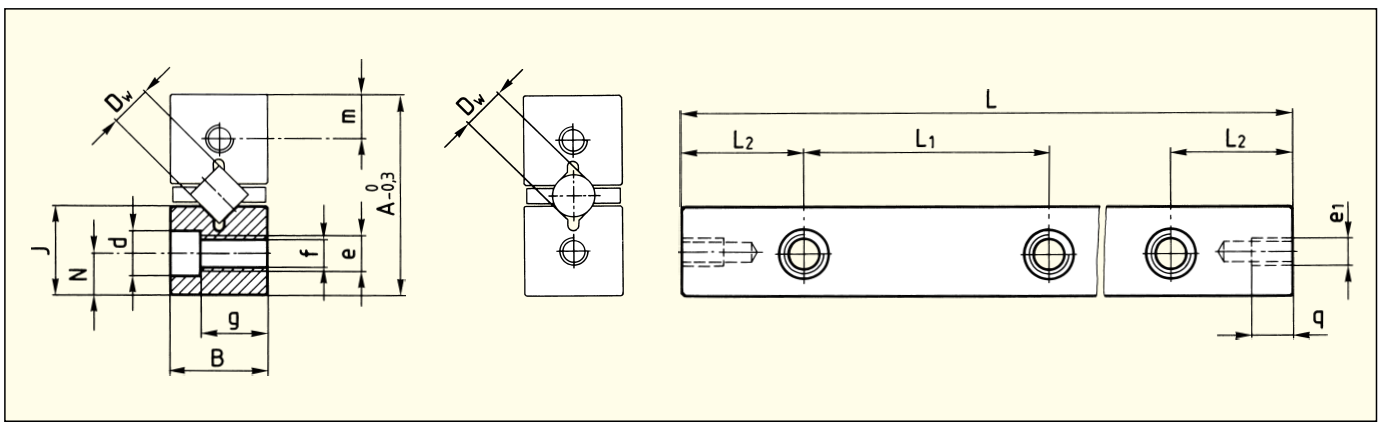

Type	Size	A	B	Dw	J	L_1	L_2	N	d	e	e_1	f	g	m	q
R	**1**	8.5	4	1.5	3.9	10	5	1.8	3	M2	M1.7	1.65	2.6	1.9	2.5
R	**2**	12	6	2	5.5	15	7.5	2.5	4.4	M3	M2.5	2.55	4	2.7	3.5
R	**3**	18	8	3	8.3	25	12.5	3.5	6	M4	M3	3.3	4.8	4.1	7
R	**6**	31	15	6	13.9	50	25	6	9.5	M6	M5	5.2	9.8	6.9	9
R	**9**	44	22	9	19.7	100	50	9	10.5	M8	M6	6.8	15.8	9.8	9
R	**12**	58	28	12	25.9	100	50	12	13.5	M10	M8	8.5	19.8	12.9	12

Type	Size	Length L															Max L
R	**1**	**020**	**030**	**040**	**050**	**060**	**070**	**080**	**100**	**120**							200
R	**2**	**030**	**045**	**060**	**075**	**090**	**105**	**120**	**150**	**180**							300
R	**3**	**050**	**075**	**100**	**125**	**150**	**175**	**200**	**225**	**250**	**275**	**300**	**350**	**400**	**500**	**600**	700
R	**6**	**100**	**150**	**200**	**250**	**300**	**350**	**400**	**450**	**500**	**600**	**700**	**800**	**1000**			1500
R	**9**	**200**	**300**	**400**	**500**	**600**	**700**	**800**	**900**	**1000**	**1100**	**1200**	**1400**				1500
R	**12**	**200**	**300**	**400**	**500**	**600**	**700**	**800**	**900**	**1000**	**1100**	**1200**					1500
R 15, R 18, R 24 and other lengths on request																	1500

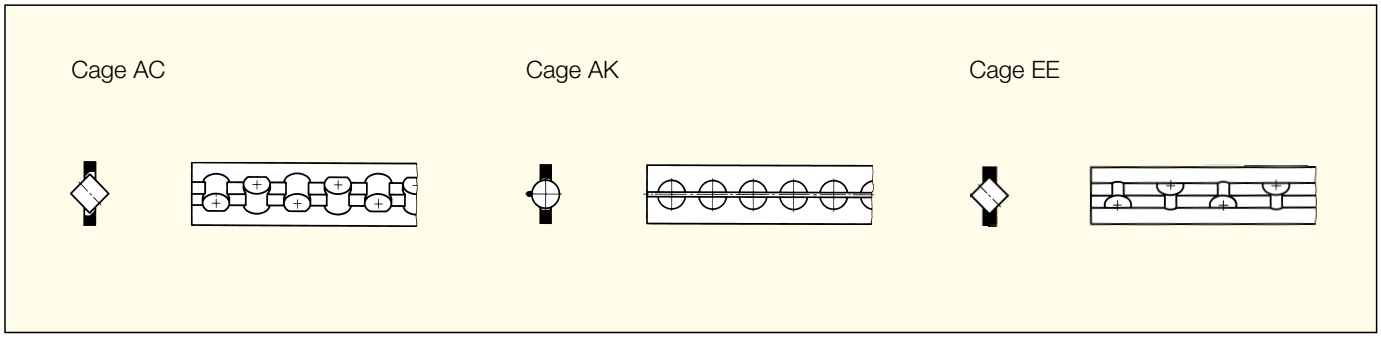

Type	Size	Accessories (see also chapter 7)							Options							
		Cages		Endpieces				Spec. Attaching screws								
		AC	AK	GA	GB	GC	GC-A	GD	SQ	SSQ	RF	EG	EE	ZG	HA	DU
R	**1**	•	•		•				•	•	•	•		•	•	•
R	**2**	•	•		•				•	•	•	•		•	•	•
R	**3**	•	•	•	•	•	•	•	(•)	(•)	(•)	•		•	•	•
R	**6**	•	•	•	•	•	•	•	(•)	(•)	(•)	•	•	•	•	•
R	**9**	•	•	•	•	•	•	•	(•)	(•)	(•)	•	•	•	•	•
R	**12**	•	•	•	•	•	•	•	(•)	(•)	(•)	•		•	•	•

(•) Maximum length 600 mm

Corrosion resistant, brass or aluminium cages on request

Ordering information Linear Bearings

Standard

Type		Size	–	Length	–	Additional ordering information
R		9	–	800	–	

Options

SQ Special quality, high requirements [1]
SSQ Super special quality, most stringent requirements [1]
RF Corrosion resistant [2]
EG Inlets rounded [3]
EE For Cages EE [4]
ZG Linear Bearings ground together [1]
HA Of Height Matched Linear Bearings in pairs [1]
DU Chrome coating type Duralloy® [2]

Order information

4 Linear Bearings Type R 9-800-SQ
2 Roller cages AC 9 x 33 rollers
8 Endpieces GB 9

[1] see chapter 15.1
[2] see chapter 15.2
[3] see chapter 16.7
[4] see chapter 7.1

6.1 Linear Bearings Type RD

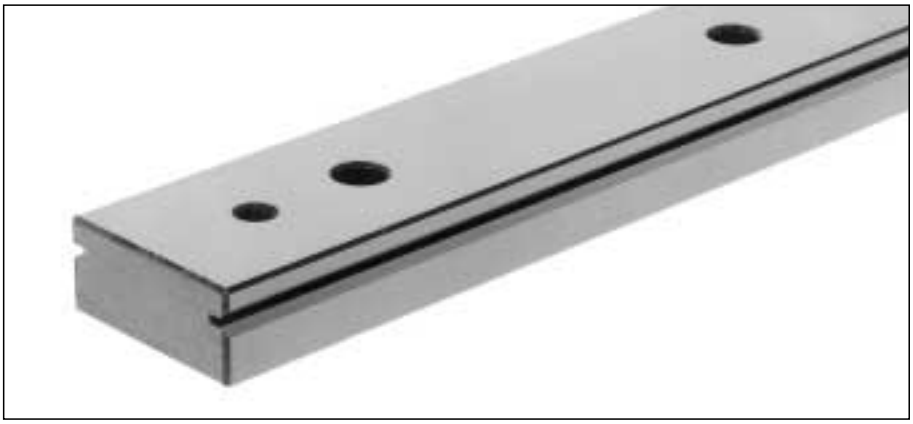

The RD linear bearing complements the R type linear bearing by providing for space saving solutions. In addition, the many applications open to the R and RD linear bearings result in substantially more economical guidance systems for the users' constructions.
In combination with SCHNEEBERGER type SR or SK recirculating units, unlimited stroke solutions can be realized.

6.2 Material

SCHNEEBERGER **linear bearings** are normally manufactured from tool steel No. 1.2510 or 1.2842. The hardness is between 58 and 62 HRC, or min. 54 HRC for certain corrosion resistant models (material No. 1.4125).
The whole SCHNEEBERGER **rolling element range** is made generally from bearing steel No. 1.3505. The hardness is between 58 and 64 HRC, or min. 56 HRC for corrosion-resistant models.

6.3 Special version

The comprehensive standardized program is complemented as the situation requires with special models so that every desired, technically optimal design can be realized. We can supply complete solutions specific to the application conditions.
The prism for cages KBN and KBS (FORMULA-S) is also available on request.

6.4 Dimension Table Type RD

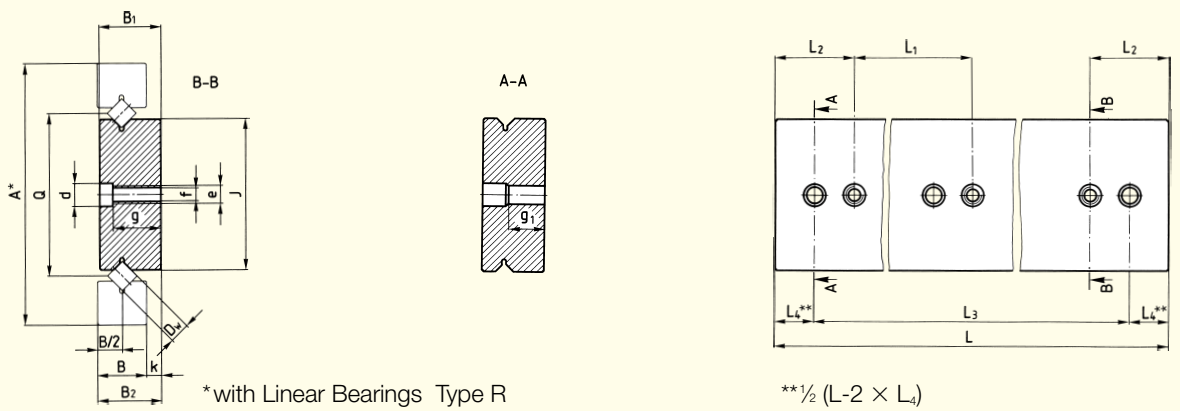

Type	Size	A	B	B_1	B_2	Dw	J	L_1	L_2	L_4	Q	d	e	f	f_1	g	g_1	k
RD	**1**	22	4	5.5	6	1.5	12.8	25	12.5	5	13.5	4.4	M3	2.55	3	3.5	–	–
RD	**2**	30	6	8.5	9	2	17	50	25	12.5	18	6	M4	3.35	3	5.4	–	–
RD	**3**	46	8	11.5	12	3	26.6	50	25	12.5	28	7.5	M5	4.2	3	7.3	6.5	4
RD	**6**	76	15	19	20	6	41.8	100	50	25	45	9.5	M6	5.2	6	13.8	12	5
RD	**9**	116	22	27	28	9	67.4	100	50	25	72	10.5	M8	6.8	8	20.8	16	6
RD	**12**	135	28	34	35	12	70.8	100	50	25	77	13.5	M10	8.5	10	25.8	20	7

Type	Size	Length L					Max L
RD	**1**	**100**	**150**	**200**			200
RD	**2**	**200**	**300**	**400**			400
RD	**3**	**300**	**400**	**500**	**600**	**800**	800
RD 6, RD 9, RD 12 and other lengths on request							2000

Cage AC

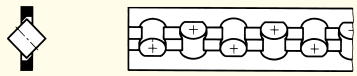

Cage AK

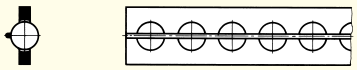

Cage EE

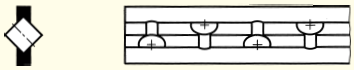

Type	**Size**	**Accessories** (see also chapter 7) Cages AC	AK	EE	**Options** SQ	SSQ	RF	EG	EE	ZG	DU
RD	**1**	•	•		•	•	•	•		•	•
RD	**2**	•	•		•	•	•	•		•	•
RD	**3**	•	•		(•)	(•)	(•)	•		•	•
RD	**6**	•	•	•	(•)	(•)	(•)	•	•	•	•
RD	**9**	•	•	•	(•)	(•)	(•)	•	•	•	•
RD	**12**	•	•		(•)	(•)	(•)	•		•	•

(•) Maximum length 600 mm

Corrosion resistant, brass or aluminium cages on request

Ordering information Linear Bearings

Standard

Type	Size	–	Length	–	Additional ordering information
RD	9	–	800	–	

Options

SQ Special quality, high requirements [1)]
SSQ Super special quality, most stringent requirements [1)]
RF Corrosion resistant [2)]
EG Inlets rounded [3)]
EE For Cages EE [4)]
ZG Linear Bearings ground together [1)]
DU Chrome coating type Duralloy® [2)]

Order information

1 Linear Bearing Type RD 9-800-SQ

[1)] see chapter 15.1
[2)] see chapter 15.2
[3)] see chapter 16.7
[4)] see chapter 7.1

7.1 Cages

Roller Cages Type KBS, Sizes 3–6 for FORMULA-S
- Suitable for all types of fitting
- Captive rollers

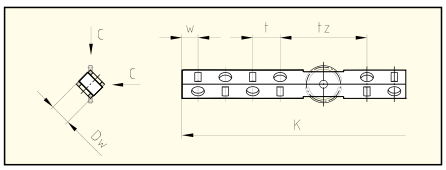

Type	Size	D_w	t	t_z	w	C/Roller in N
KBS	**3**	3	5	18	3.5	410
KBS	**4**	4.5	6.5	23	4	850
KBS	**6**	6.5	8.5	27	5	1800

Ordering example: 2 Roller Cages KBS 4 × 15 rollers for RN 4

Roller cages Type KBN, for RN and RNG, Sizes 3–12
- Suitable for all types of fitting
- Captive rollers
- DELRIN 500 CL

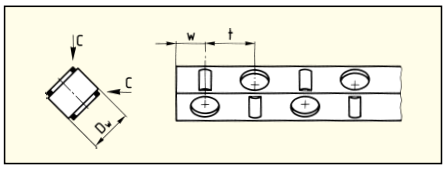

Type	Size	D_w	t	w	C/Roller in N
KBN	**3**	3	5	3.5	410
KBN	**4**	4.5	6.5	4	850
KBN	**6**	6.5	8.5	5	1800
KBN	**9**	9	12	7.5	3900
KBN	**12**	12	15	9	6500

Ordering example: 2 Roller Cages KBN 4 × 15 rollers

Roller Cages Type AC, Sizes 1–12 for R and RD
- Suitable for all types of fitting
- Captive rollers
- Material: Sizes 1 and 2 Delrin 500 CL
  from size 3 PA 12 GF 30%
  Steel wire

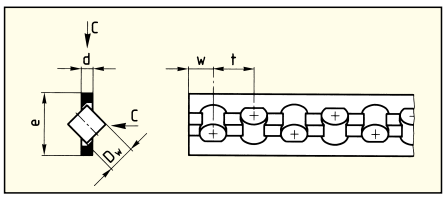

Type	Size	D_w	d	e	t	w	C/ Roller in N	Number of rollers	Max. Length
AC	**1**	1.5	0.45	3.5	3	1.5	50		70
AC	**2**	2	0.75	5	4	2	85		85
AC	**3**	3	1	7	5	2.5	130	240	1200
AC	**6**	6	2.5	14	9	6	530	166	1500
AC	**9**	9	3.5	20	14	9	1300	107	1500
AC	**12**	12	4.5	25	18	11	2500	83	1500

Ordering example: 2 Roller cages AC 3 × 20 rollers

Ball cages Type AK, Sizes 1–12 for R and RD

- Suitable for all types of fitting
- Captive balls
- Material: Sizes 1 to 3 POM
  from size 6 PA 12 GF 30%
  Steel wire composite

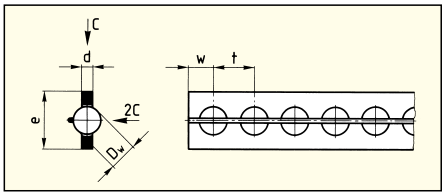

Type	Size	D_w	d	e	t	w	C / Ball in N	Number of balls	Max. Length
AK	**1**	1.5	0.45	3.5	2.2	1.5	9	23	80
AK	**2**	2	0.75	5	4	2	15	23	100
AK	**3**	3	1	7	4.2	2.5	25	42	180
AK	**6**	6	2.5	14	9	6	65	166	1500
AK	**9**	9	3.5	20	14	9	150	107	1500
AK	**12**	12	4.5	25	18	11	260	83	1500

Ordering example: 2 Ball cages AK 1 × 5 balls

Roller Cages Type EE, Sizes 6 and 9 for R 6, R 9, RD 6 and RD 9 (Special Accessories)

Application see chapter 17.5

- Use only with specially designated Linear bearings (suffix EE) and Type GB or GC endpieces
- For horizontal and vertical fitting
- Captive rollers
- Acts as a dirt wiper, thus running friction is somewhat higher
- When ordering, it is essential that the overall cage length K is quoted
- Material PE plastic
- Not suitable for protruding cages and gravity loaded bearings

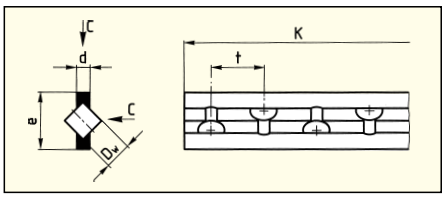

Type	Size	D_w	d	e	t	C / Roller in N
EE	**6**	6	3.2	13.5	12	530
EE	**9**	9	4.6	19	18	1300

Ordering example: 2 Roller cages EE 6 × 150 mm length

Other materials for cages/rolling elements on request

7.2 Endpieces

Endpieces Type GB
- For horizontal or vertical fitting
- For R 1 and R 2

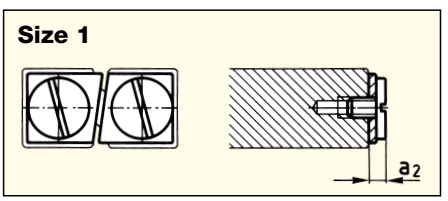

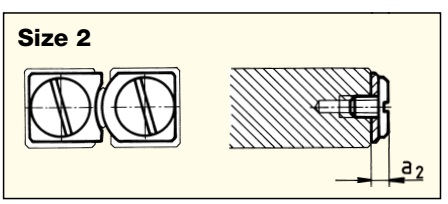

- For horizontal or vertical fitting
- For Type EE roller cages
- For R 3 to R 12

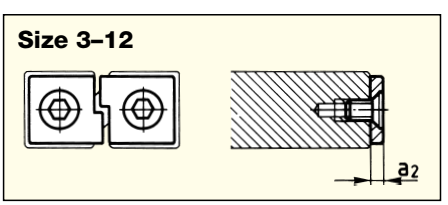

Endpieces Type GC
- For protruding cages
- For R 3 to R 12

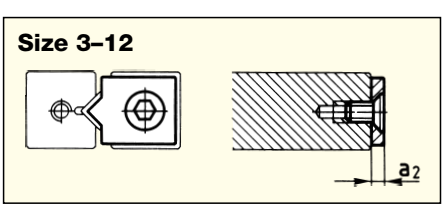

Endpieces Type GC–A with Wipers
- For horizontal or vertical fitting
- Felt Wiper
- For R 3 to R 12

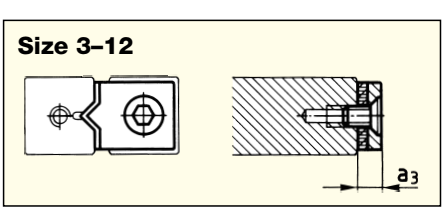

Size	1	2	3	6	9	12
a_1	–	–	2	3	3	3
a_2	1.7	2	2	3	4	5
a_3	–	–	5	6	7	8

Ordering example: 8 Endscrews GA 6 or 4 Endpieces GC–A 9

Endpieces delivered with attaching screws

Endpieces Type GBN
- For horizontal and vertical fitting
- For RNG 4 and 6

Size 4 and 6

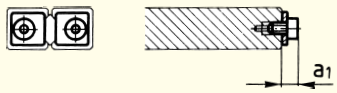

- For RNG 9 to 12

Size 9–12

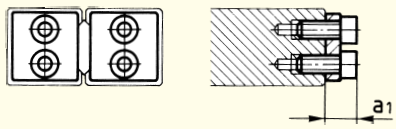

Endpieces Type GCN
- For protruding cages
- For RNG 4 and 6

Size 4 and 6

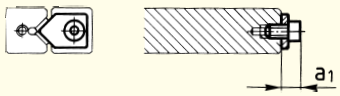

- For RNG 9 to 12

Size 9–12

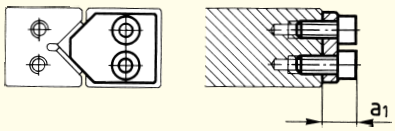

Endpieces Type GCN-A with Wipers
- For horizontal and vertical fitting
- Plastic wiper
- For RNG 4 and 6

Size 4 and 6

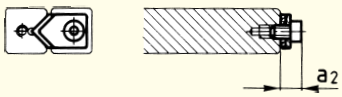

- For RNG 9 to 12

Size 9–12

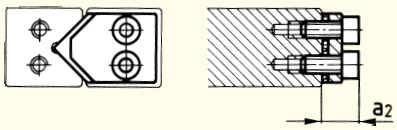

Size	4	6	9	12
a_1	4	4	4	8.5
a_2	5.5	5.5	5.5	10

Ordering example: 40 Endpieces GBN 9

Endpieces delivered with attaching screws

7.3 Attaching Screws

Special Attaching Screws for R and RN
Type GD, Sizes 3–12
– To compensate for difference in hole pitch

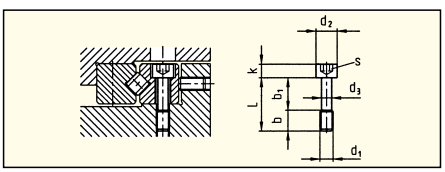

Type	Size	L	b	b_1	d_1	d_2	d_3	k	s
GD	**3**	12	5	7	M3	5	2.3	3	2.5
GD	**4**	16	7	9	M4	6.5	3	4	3
GD	**6**	20	8	12	M5	8	3.9	5	4
GD	**9**	30	12	18	M6	8.5	4.6	6	5
GD	**12**	40	17	23	M8	11.3	6.25	8	6

Special Attaching Screws for RNG
Type GDN, Sizes 4–12
– To compensate for difference in hole pitch

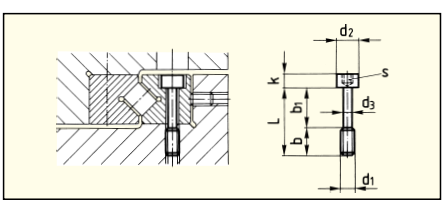

Type	Size	L	b	b_1	d_1	d_2	d_3	k	s
GDN	**4**	12	5	7	M2.5	4.5	1.85	2.5	2
GDN	**6**	16	5	11	M3	5.5	2.3	3	2.5
GDN	**9**	25	11	14	M4	7	3	4	3
GDN	**12**	30	12	18	M6	10	4.6	6	5

Ordering example: 50 Special Attaching Screws GDN 9

7.4 Endscrews

Endscrews Type GAN
– $a_1 = 2$
– For RN 3–RN 4

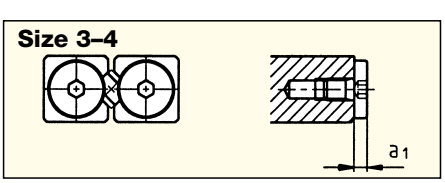

Endscrews Type GA
– For horizontal fitting
– For R 3–R 12
– From RN 6–RN 12

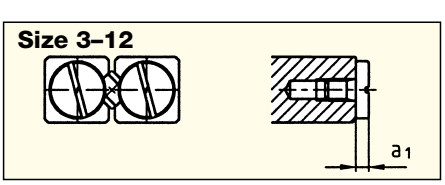

Order numbers in bold face are standard articles

SCHNEEBERGER LINEAR TECHNOLOGY

8.1 Linear Bearings Type N and O

Type N/O linear bearings are equipped with needle cages and are suitable for high load applications. The SCHNEEBERGER composite cages used with these guides ensure that there is little resistance to motion as compared to other similar needle bearing guides, while providing very great rigidity.

8.2 Material

SCHNEEBERGER **linear bearings** are normally manufactured from tool steel No. 1.2510 or 1.2842. The hardness is between 58 and 62 HRC, or min. 54 HRC for certain corrosion resistant models (material No. 1.4125).
The whole SCHNEEBERGER **rolling element range** is made generally from bearing steel No. 1.3505. The hardness is between 58 and 64 HRC, or min. 56 HRC for corrosion-resistant models.

8.3 Special version

The comprehensive standardized program is complemented as the situation requires with special models so that every desired, technically optimal design can be realized. We can supply complete solutions specific to the application conditions.

8.4 Dimension Table Type N/O

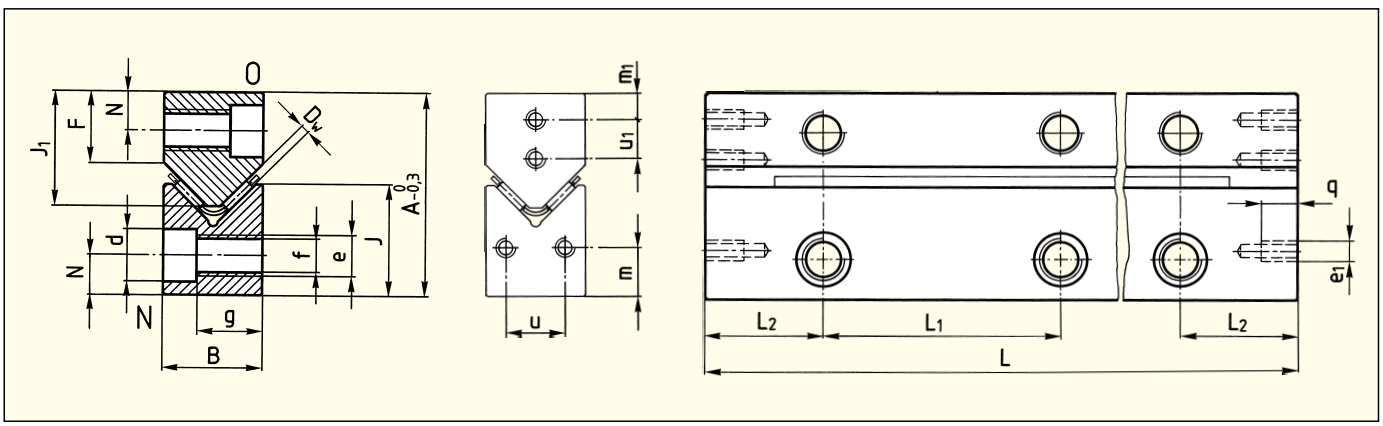

Type	Size	A	B	Dw	F	J	J_1	L_1	L_2	N	d	e	e_1	f	g	m	m_1	q	u	u_1
N/O	**62015**	31	15	2	11	16	18	50	25	6	9.5	M6	M3	5.2	9.8	7.5	4.5	7	7	7
N/O	**92025**	44	22	2	15	24	24.5	100	50	9	10.5	M8	M4	6.8	15.8	11	6	11	10	10
N/O	**2025**	52	25	2	18	28	29	100	50	10	13.5	M10	M6	8.5	16.8	12	7	11	14	11
N/O	**2535**	62	30	2.5	22	34	35	100	50	12	16.5	M12	M6	10.5	19.8	15	8	11	18	12
N/O	**3045**	74	35	3	25	42.5	40	100	50	14	18.5	M14	M6	12.5	22.8	18	10	11	19	16
N/O	**3555**	78	45	3.5	25	45	45	100	50	14	18.5	M14	M6	12.5	32.8	18	12	11	29	20

Type	Size	Length L									Max L
N/O	**62015**	**100**	**150**	**200**	**250**	**300**	**350**	**400**	**450**	**500**	1200
N/O	**92025**	**200**	**300**	**400**	**500**	**600**	**700**	**800**			2000
N/O	**2025**	**200**	**300**	**400**	**500**	**600**	**700**	**800**	**900**	**1000**	2000
N/O	**2535**	**300**	**400**	**500**	**600**	**700**	**800**	**900**	**1000**		2000
N/O 3045, N/O 3555 and other lengths on request											

Cage SHW

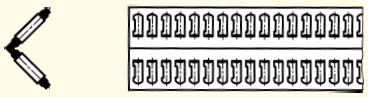

Cage HW

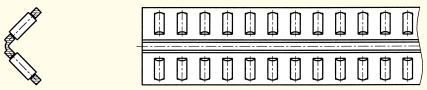

Type	**Size**	**Accessories** (see also chapter 10)								Spec. Attaching Screws	**Options**							
		Cages		Endpieces														
		SHW	HW	GFN	GFO	GH	GH-A	GW	GW-A	GD	SQ	SSQ	RF	EG	ZG	HA	DU	KS
N/O	**62015**		•	•	•	•	•	•	•	•	(•)	(•)	(•)	•	•	•	•	
N/O	**92025**	•	•	•	•	•	•	•	•	•	(•)	(•)	(•)	•	•	•	•	•
N/O	**2025**	•	•	•	•	•	•	•	•	•	(•)	(•)	(•)	•	•	•	•	•
N/O	**2535**	•	•	•	•	•	•	•	•	•	(•)	(•)	(•)	•	•	•	•	•
N/O	**3045**	•	•	•	•	•	•	•	•	•	(•)	(•)	(•)	•	•	•	•	•
N/O	**3555**	•	•	•	•	•	•	•	•	•	(•)	(•)	(•)	•	•	•	•	•
(•) Maximum length 600 mm																		

Ordering information Linear Bearings

Standard

Type	Size	–	Length	–
N	2025	–	800	–
O	2025	–	400	–

Order information

2 Linear Bearings Type N 2025-800
2 Linear Bearings Type O 2025-400-EG
2 Needle Cages SHW 15 x 600 mm
4 Endpieces GH 2025

Options

Additional ordering information

SQ	Special quality, high requirements [1]
SSQ	Super special quality, most stringent requirements [1]
RF	Corrosion resistant [2]
EG	Inlets rounded [3]
ZG	Linear Bearings ground together [1]
HA	Of Height Matched Linear Bearings in pairs [1]
DU	Chrome coating type Duralloy® [2]
KS	Integrated cage assist

[1] see chapter 15.1
[2] see chapter 15.2
[3] see chapter 16.7

SCHNEEBERGER LINEAR TECHNOLOGY

9.1 Linear Bearings Type M and V

Type M/V linear bearings are equipped with needle cages and are suitable for high load applications. The SCHNEEBERGER composite cages used with these guides ensure that there is little resistance to motion as compared to other similar needle bearing guides, while providing very great rigidity.

9.2 Material

SCHNEEBERGER **linear bearings** are normally manufactured from tool steel No. 1.2510 or 1.2842. The hardness is between 58 and 62 HRC, or min. 54 HRC for certain corrosion resistant models (material No. 1.4125).
The whole SCHNEEBERGER **rolling element range** is made generally from bearing steel No. 1.3505. The hardness is between 58 and 64 HRC or min. 56 HRC for corrosion-resistant models.

9.3 Special version

The comprehensive standardized program is complemented as the situation requires with special models so that every desired, technically optimal design can be realized. We can supply complete solutions specific to the application conditions.

9.4 Dimension Table Type M/V

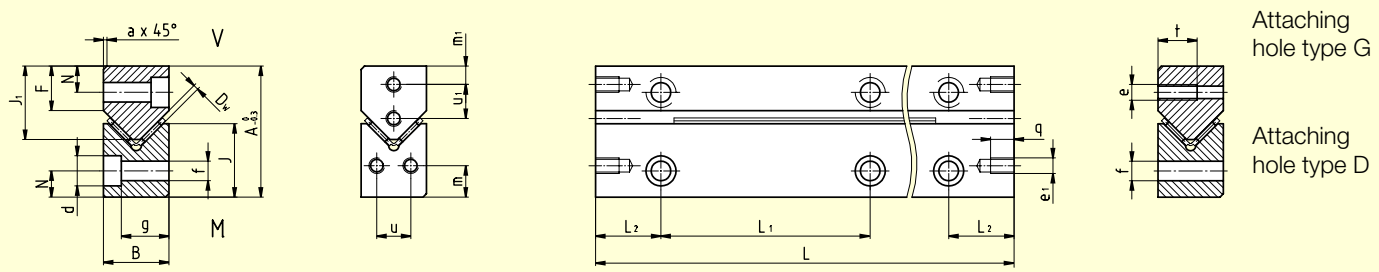

Attaching hole type V

Type	Size	A	B	Dw	F	J	J_1	L_1	L_2	N	a	d	e	e_1	f	g	m	m_1	q	t	u	u_1
M/V	**3015**	30	15	2	10.5	15.5	17.4	[1] 40	[3]	5.5	0.7	8.5	M4	M3	5.25	10.5	8	5.5	7	15	7	7
M/V	**4020**	40	20	2	13.5	22.5	22	[2] 80	[4]	7.5	1.3	11.5	M6	M5	7.5	13.2	10	5.5	8	20	11	10.5
M/V	**5025**	50	25	2	17	28	28	[2] 80	[4]	10	1.3	11.5	M6	M6	7.5	18.2	12	7	9	15	13	13
M/V	**6035**	60	35	2.5	20	35	35.5	100	50	11	1.3	15	M8	M6	10	26	14	8	9	20	20	18
M/V	**7040**	70	40	3	24	40	41.5	100	50	13	1.3	18.5	M10	M6	12.5	29	16	10	9	25	20	20
M/V	**8050**	80	50	3.5	26	45	48	100	50	14	1.3	20	M12	M6	14	37	20	10	9	30	30	25

[1] For length 100 : L_1 = 35 (2×)
[2] For length 100 : L_1 = 50
[3] min. 15
[4] min. 20

Type	Size	Length L										Max L
M/V	**3015**	100	150	200	300	400	500	600				1200
M/V	**4020**	100	150	200	300	400	500	600				1500
M/V	**5025**	100	200	300	400	500	600	700	800	900	1000	1500
M/V	**6035**	200	300	400	500	600	700	800	900	1000		1500
M/V	**7040**	200	300	400	500	600	700	800	900	1000		1500
M/V	**8050**	300	400	500	600	700	800	900	1000			1500
Other Lengths on request												

Cage SHW

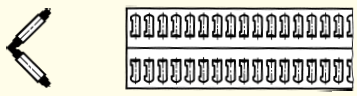

Cage HW

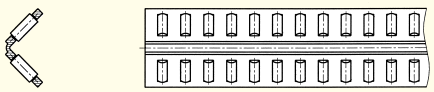

Type	Size	Accessories (see also chapter 10) Cages SHW	HW	Endpieces EM	EV	EAM	EAV	Options SQ	SSQ	RF	EG	ZG	HA	KS
M/V	**3015**		•	•	•	•	•	(•)	(•)	(•)	•	•	•	
M/V	**4020**	•	•	•	•	•	•	(•)	(•)	(•)	•	•	•	•
M/V	**5025**	•	•	•	•	•	•	(•)	(•)	(•)	•	•	•	•
M/V	**6035**	•	•	•	•	•	•	(•)	(•)	(•)	•	•	•	•
M/V	**7040**	•	•	•	•	•	•	(•)	(•)	(•)	•	•	•	•
M/V	**8050**	•	•	•	•	•	•	(•)	(•)	(•)	•	•	•	•

(•) Maximum length 600 mm

Ordering information Linear Bearings

Standard

Type	Size	–	Length	–
M	5025	–	600	–
V	5025	–	600	–

Options

Additional ordering information

SQ Special quality, high requirements [1)]
SSQ Super special quality, most stringent requirements [1)]
RF Corrosion resistant [2)]
EG Inlets rounded [3)]
ZG Linear Bearings ground together [1)]
HA Of Height Matched Linear Bearings in pairs [1)]
KS Integrated cage assist

Order information

2 Linear Bearings Type M 5025-600
2 Linear Bearings Type V 5025-600
2 Needle Cages SHW 15 x 500 mm
4 Endpieces Type GFN 5025
4 Endpieces Type GFO 5025

[1)] see chapter 15.1
[2)] see chapter 15.2
[3)] see chapter 16.7

10.1 Cages

Needle Cage Type SHW, Sizes 15–30
- For all types of fitting
- Captive needles
- Material plastic PA 12 GF 30%/Stainless steel composite

The needle cages are supplied in one piece in the customer specified length K.

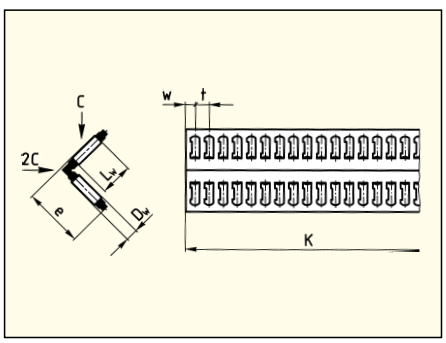

Type	Size	D_w	L_w	e	t	w	C/Needle in N	Suitable for Linear Bearings Type		Max. Length
SHW	**15**	2	6.8	14	4	2.9	750	N/O 92025 and 2025	M/V 4025 and 5025	1500
SHW	**20**	2.5	9.8	19	4.75	3.4	1375	N/O 2535	M/V 6035	1500
SHW	**25**	3	13.8	25	5.2	3.6	2350	N/O 3045	M/V 7040	1500
SHW	**30**	3.5	17.8	30	6.1	4.3	3600	N/O 3555	M/V 8050	1500

Ordering example: 2 Needle cages SHW 20 × 402 mm length

Needle Cage Type HW, Sizes 10–30
- For all types of fitting
- Captive needles
- Material: Light metal; HW 10: steel

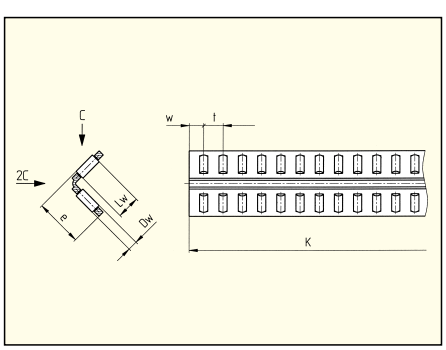

Type	Size	D_w	L_w	e	t	w	C/Needle in N	Suitable for Linear Bearings Type	Max. Length
HW	**10**	2	4.8	10	4	3	530	M/V 3015	2000
HW	**15**	2	6.8	14	4.5	3.5	750	M/V 4020 and 5025	2000
HW	**16**	2	8.8	16	3.8	2.8	970	M/V 5025	2000
HW	**20**	2.5	9.8	20	5.5	4	1375	M/V 6035	2000
HW	**25**	3	13.8	25	6	4.5	2350	M/V 7040	2000
HW	**30**	3.5	17.8	30	7	5	3600	M/V 8050	2000

10.2 Endpieces for N/O

Endpieces Type GFN and GFO, Sizes 62015–3555
– For horizontal and vertical fitting

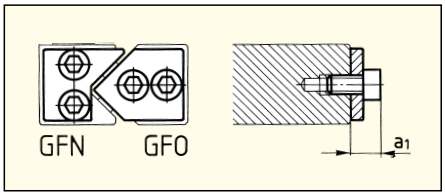

Endpieces Type GH, Sizes 62015–3555
– For protruding cages

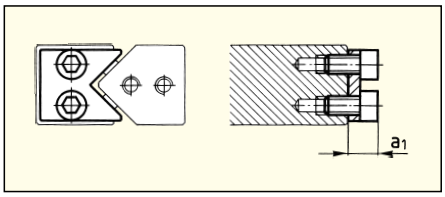

Endpieces Type GH-A with Wipers, Sizes 62015–3555
– For horizontal and vertical fitting
– Felt wiper

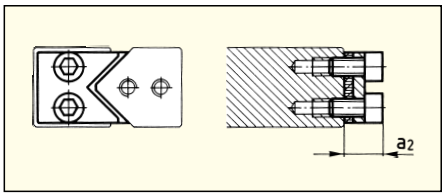

Endpieces Type GW, Sizes 62015–3555
– For protruding cages

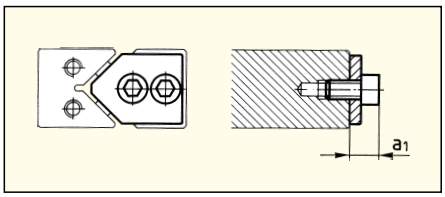

Endpieces Type GW-A with Wipers, Sizes 62015–3555
– For horizontal and vertical fitting
– Felt wiper

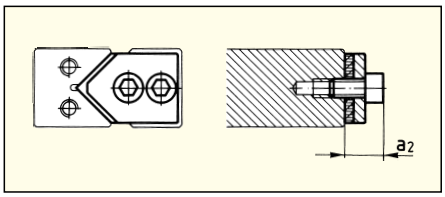

Size	62015	92025	2025	2535	3045	3555
a_1	6	7	10	10	10	11
a_2	9	10	13	13	13	14

Ordering example: 4 Endpieces GFN 3045, 4 Endpieces GFO 3045 or 4 Endpieces GW 3045

Endpieces delivered with attaching screws

Screws for N/O

Special Attaching Screws
Type GD, Size 6–3555
– To compensate for differences in hole pitches

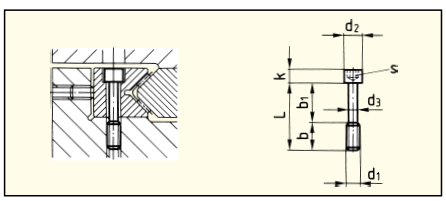

Type Size		L	b	b_1	d_1	d_2	d_3	k	s	Suitable for Linear Bearings Type
GD	**6**	20	8	12	M5	8	3.9	5	4	N/O 62015
GD	**9**	30	12	18	M6	8.5	4.6	6	5	N/O 92025
GD	**2025**	35	16	19	M8	11.3	6.25	8	6	N/O 2025
GD	**2535**	40	18	22	M10	13.9	7.9	10	8	N/O 2535
GD	**3045**	50	25	25	M12	15.8	9.6	12	10	N/O 3045
GD	**3555**	60	25	35	M12	15.8	9.6	12	12	N/O 3555

Ordering example: 40 Special Attaching Screws GD 2025

10.3 Endpieces for M/V

Endpieces Type EM/EV,
Sizes 3015–8050

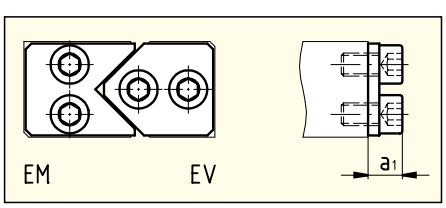

Endpieces Type EAM,
Sizes 3015–8050
– Wiper

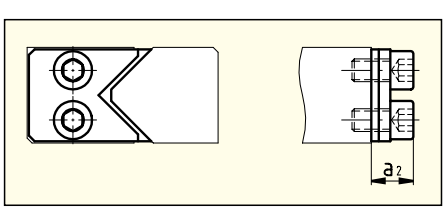

Endpieces Type EAV,
Sizes 3015–8050
– Wiper

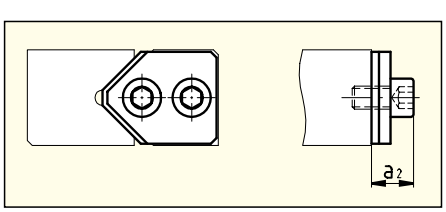

Dimension Table Type EM to EAV

Size	3015	4020	5025	6035	7040	8050
a_1	5	8	9	9	9	9
a_2	7	10	11	11	11	11

Endpieces delivered with attaching screws

SCHNEEBERGER
LINEAR TECHNOLOGY

11.1 Recirculating Type SK and SKD

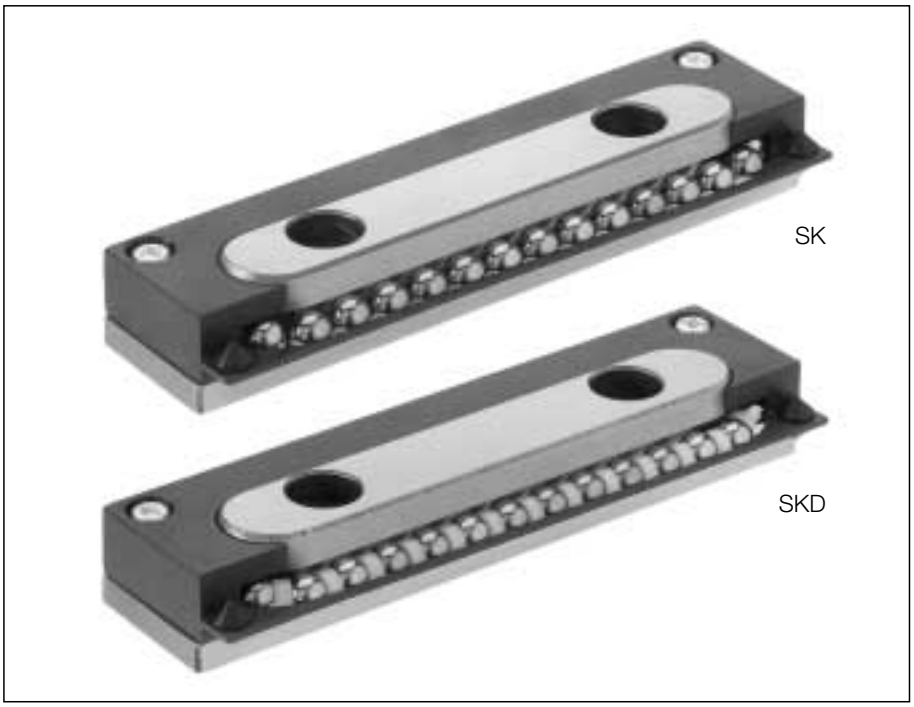

The type SK recirculating unit is equipped with balls and is suitable for low to medium loading. It is used with SCHNEEBERGER type R or RD linear bearings and can be uniformly loaded in every direction. Hence, space saving designs may be realized. Some sizes can be additionally fitted with damping elements (type designation SKD). These provide smoother operation but also have a somewhat reduced load carrying capacity.

11.2 Material

Steel carrier: hardened and very precisely ground.
All recirculating parts, with their integrated ball retainers: protectively coated aluminium or plastic.
From size 3 and larger, replaceable plastic track wipers are included as standard.
With type SKD, available from size 6, the balls are spaced with plastic damping elements which give them even better running qualities.

11.3 Dimension Table SK and SKD

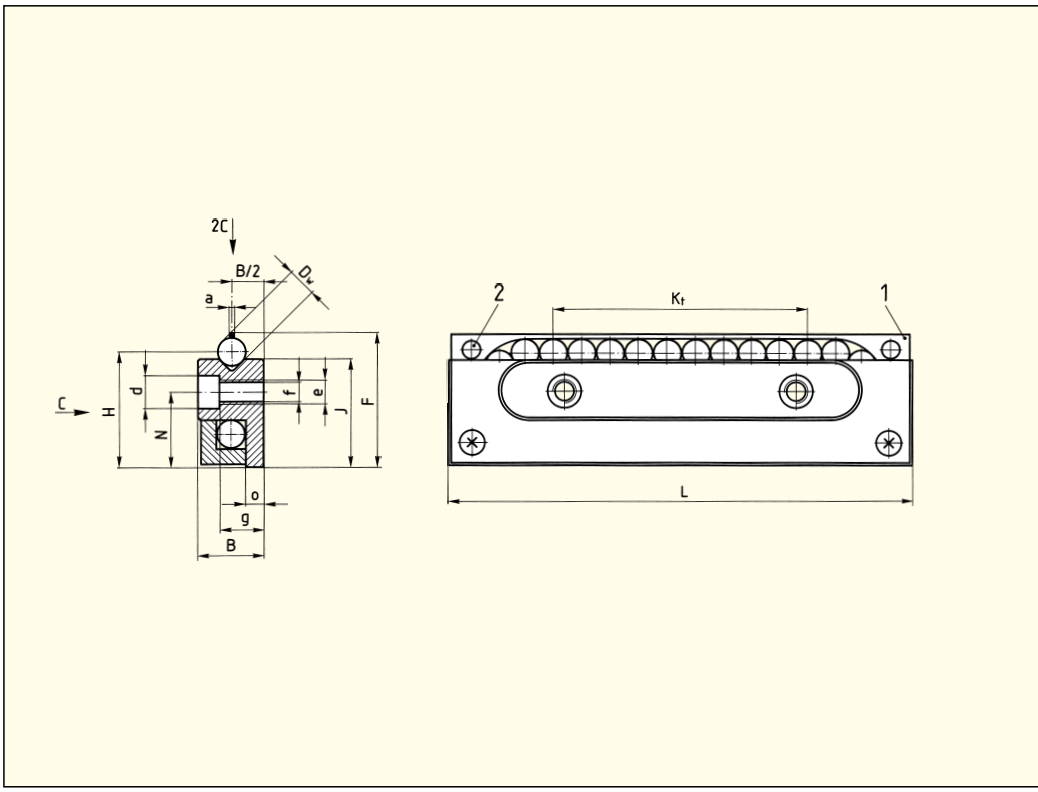

1: Retaining shoulder; may not be used as a stop
2: Wipers, from size SK 3-075 and larger

Type	Size			Weight in g	B	D_w	F	H	J	K_t
SK	**1-022**		**–**	5	4	1.5	8.4	7.25	6.9	9
SK	**2-032**		**–**	10	6	2	11	9.5	9	16
SK	**3-075**		**–**	45	8	3	16.9	14.5	13.8	48
SK	**6-100**	**SKD**	**6-100**	200	15	6	28.9	24.5	22.9	60
SK	**6-150**	**SKD**	**6-150**	300	15	6	28.9	24.5	22.9	102
SK	**9-150**	**SKD**	**9-150**	670	22	9	45.1	39	36.7	90
SK	**9-200**	**SKD**	**9-200**	940	22	9	45.1	39	36.7	144
SK	12-200	SKD	12-200	1470	28	12	57.1	49	45.9	120

Ordering example: 4 Recirculating units SK 6-100 or
8 Recirculating units SK 6-100-GP, matched in sets of 4

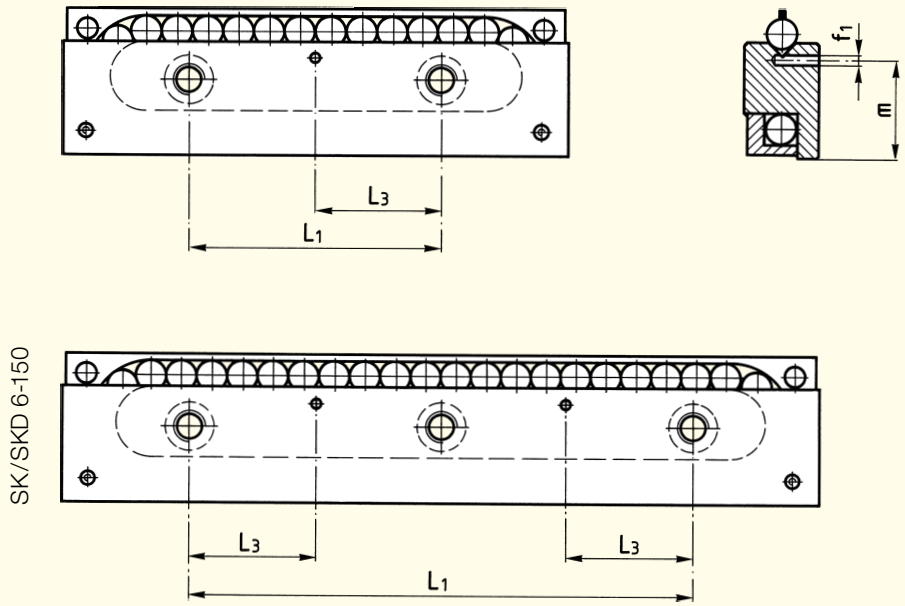

L	L_1	L_3	N	Q	a	d	e	f	f_1	g	m	o	C in N SK	C in N SKD
22	1×10	–	4.8	13.5	0.3	3	M2	1.65	–	2.6	–	1.2	63	–
32	1×15	–	6	18	0.3	4.4	M3	2.55	–	4	–	1.9	135	–
75	1×25	12.5	9	28	0.5	6	M4	3.3	1.5	4.9	11.5	2.4	425	–
100	1×50	25	15	45	1	9.5	M6	5.2	2	9.8	19.7	4.4	715	650
150	2×50	25	15	45	1	9.5	M6	5.2	2	9.8	19.7	4.4	1170	1100
150	1×100	50	26	72	1.5	10.5	M8	6.8	3	15.8	32.4	6.3	1650	1500
200	1×100	50	26	72	1.5	10.5	M8	6.8	3	15.8	32.4	6.3	2550	2400
200	1×100	50	32	77	2	13.5	M10	8.5	3	19.8	40.2	7.7	2860	2600

Suitable linear bearings: Type R and RD (chapter 5 and 6)

11.4 Fitting dimensions

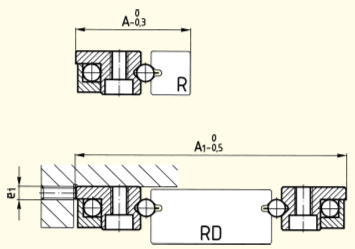

Type	Size			A	A_1	e_1
SK	**1-022**		**–**	11.5	28	M1.6
SK	**2-032**		**–**	15.5	37	M2.5
SK	**3-075**		**–**	23.5	57	M3
SK	**6-100**	**SKD**	**6-100**	40	94	M5
SK	**6-150**	**SKD**	**6-150**	40	94	M5
SK	**9-150**	**SKD**	**9-150**	61	150	M6
SK	**9-200**	**SKD**	**9-200**	61	150	M6
SK	12-200	SKD	12-200	78	175	M8

11.5 Permissible moments

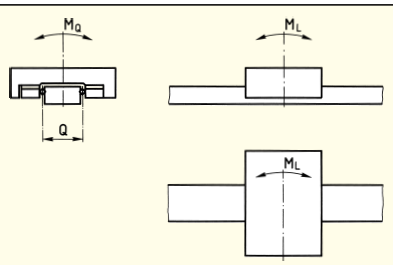

Type	Size			M_L in Nm SK	M_L in Nm SKD	M_Q in Nm SK	M_Q in Nm SKD
SK	**1-022**		**–**	0.4	–	0.8	–
SK	**2-032**		**–**	1.4	–	2.4	–
SK	**3-075**		**–**	7.2	–	12	–
SK	**6-100**	**SKD**	**6-100**	23	23	32	29
SK	**6-150**	**SKD**	**6-150**	40	40	53	50
SK	**9-150**	**SKD**	**9-150**	81	81	119	108
SK	**9-200**	**SKD**	**9-200**	130	130	184	173
SK	12-200	SKD	12-200	187	187	220	200

Order numbers in bold face are standard articles and lengths.
Order numbers in normal face are special articles and lengths and are available on request.

SCHNEEBERGER LINEAR TECHNOLOGY

12.1 Recirculating Unit Type SKC

The recirculating unit type SKC provides unlimited stroke and equal load carrying capacity in all directions. The SKC, designed for low-to-medium loading conditions, operates dry – lubrication is not required!
These units, used with SCHNEEBERGER linear bearings type R or RD, are drop-in-replacements for SCHNEEBERGER SK and SR recirculating units.
The combination of coated stainless steel, ceramic and Teflon® makes this recirculating unit suitable for **lubrication free operation in high vacuum and clean room applications.**

12.2 Material

The precision ground body is made from stainless steel and coated with «Duralloy Ultra-Slide DSV», a thin dense chrome. The load carrying balls are made from ceramic. The ceramic balls are spaced by smaller diameter Teflon® balls.

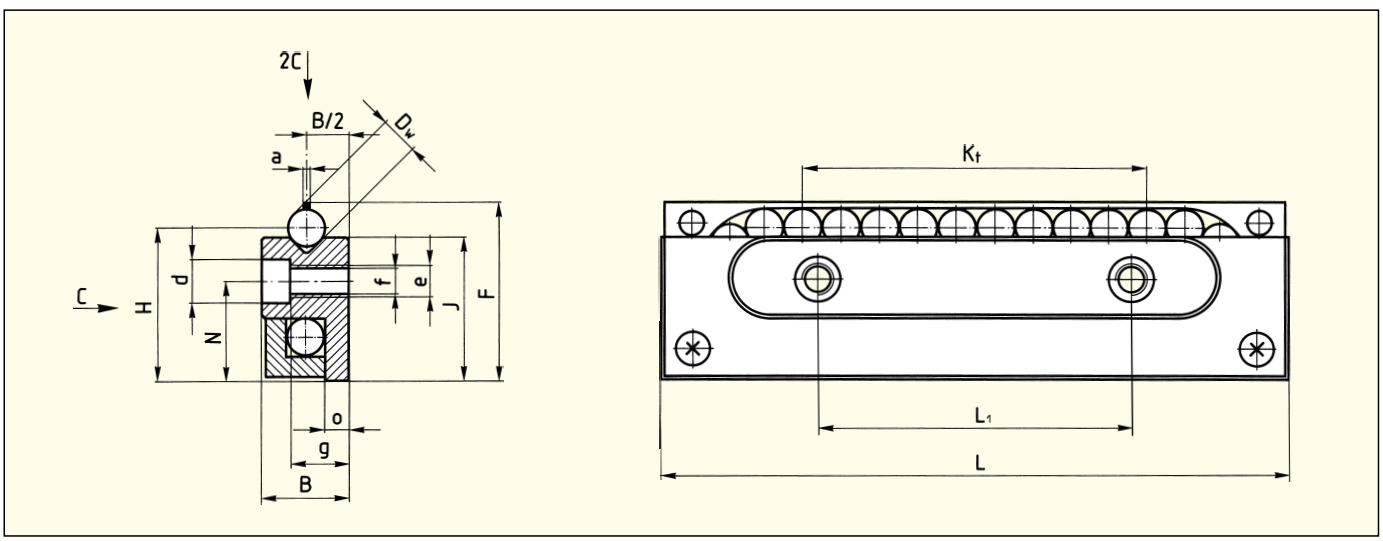

Type	Size	B	Dw	F	H	J	Kt	L	L_1	N	a	d	e	f	g	o	*C in N
SKC	**3-075**	8	3	16.9	14.5	13.8	48	75	25	9	0.5	6	M4	3.3	4.9	2.4	150
SKC	**6-100**	15	6	28.9	24.5	22.9	60	100	50	15	1	9.5	M6	5.2	9.8	4.4	250

* Load carrying capacity without lubrication

Fitting dimensions/tolerances

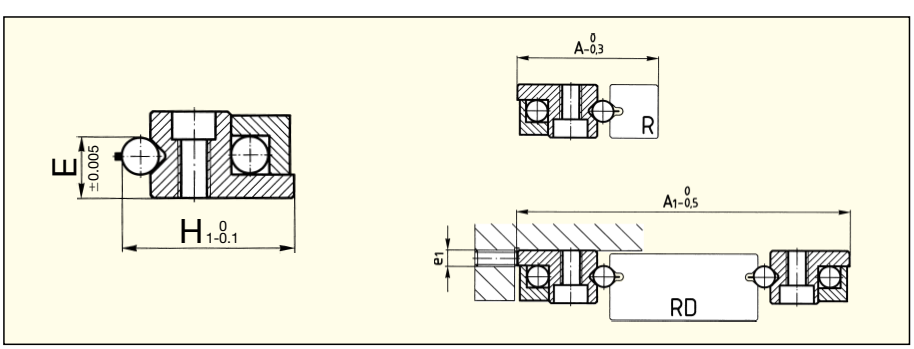

Type	Size	A	A_1	e_1
SKC	**3-075**	23.5	57	M3
SKC	**6-150**	40	94	M5

Matched sets (GP):
Dimension E and H_1 within 3 µm

General data

Maximum speed: 120 m/min
Maximum acceleration: 50 m/s^2
Temperature range: −150 to 200° C

13.1 Recirculating Unit Type SR

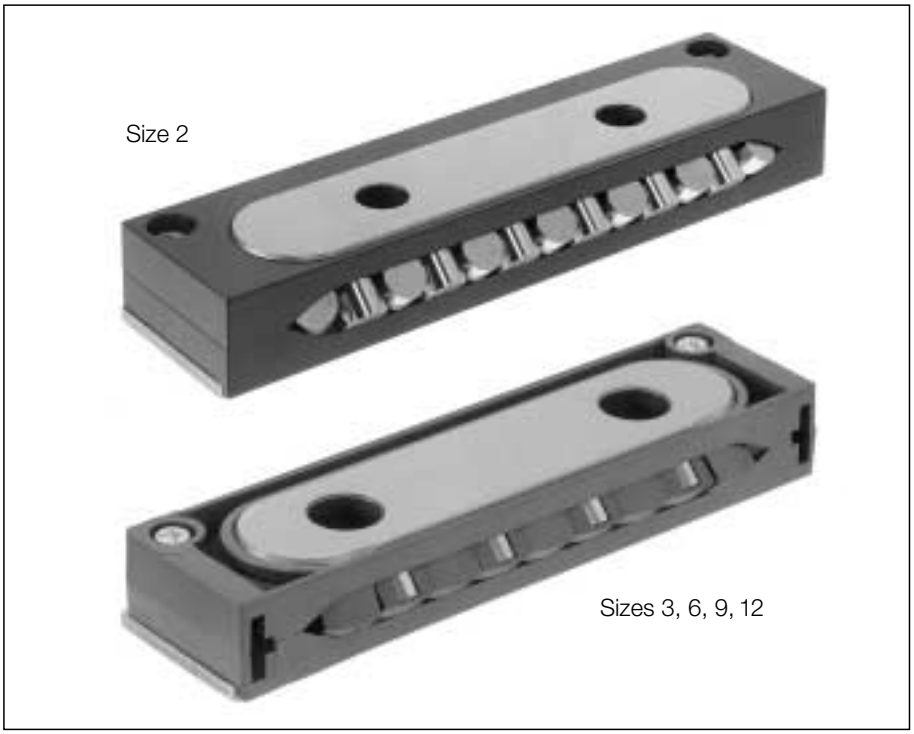

The SR recirculating unit has cross rollers and is suitable for medium to high loading. When used together with SCHNEEBERGER type R or RD linear bearings the same fitting dimensions result as with type SK, but the load carrying capacity and rigidity are greater.

13.2 Material

With type SR recirculating units the cross rollers run on a hardened and very precisely ground steel carrier. The recirculating housing, made from protectively coated aluminum or plastic, prevents the rollers from falling out. On the standard size 3–12 models the rollers are mounted in plastic inserts.

13.3 Dimension Table Type SR

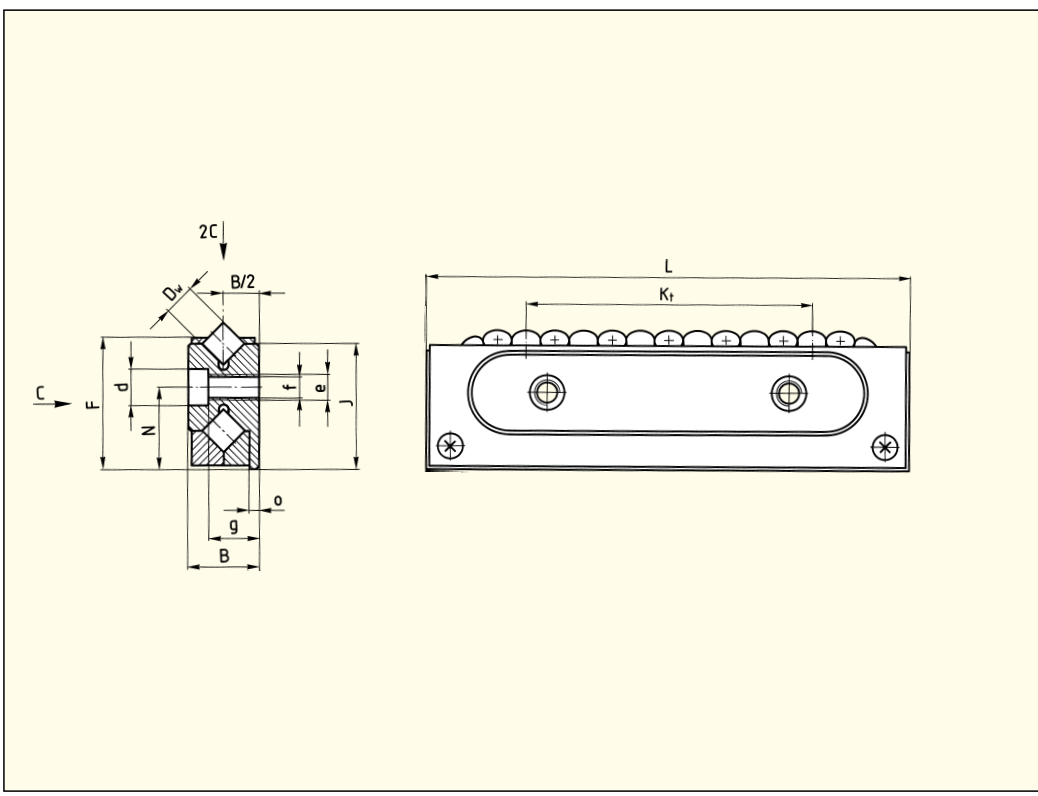

Type	Size	Weight in g	B	D_w	F	J	K_t	L
SR	**2-032**	10	6	2	9.8	9.5	16	32
SR	**3-075**	50	8	3	15	14.5	46	75
SR	**6-100**	210	15	6	25.7	24.5	56	100
SR	**6-150**	310	15	6	25.7	24.5	105	150
SR	**9-150**	750	22	9	40.5	39	92	150
SR	12-200	1580	28	12	51.5	49	112	200

Ordering example: 20 Recirculating units SR 9-150

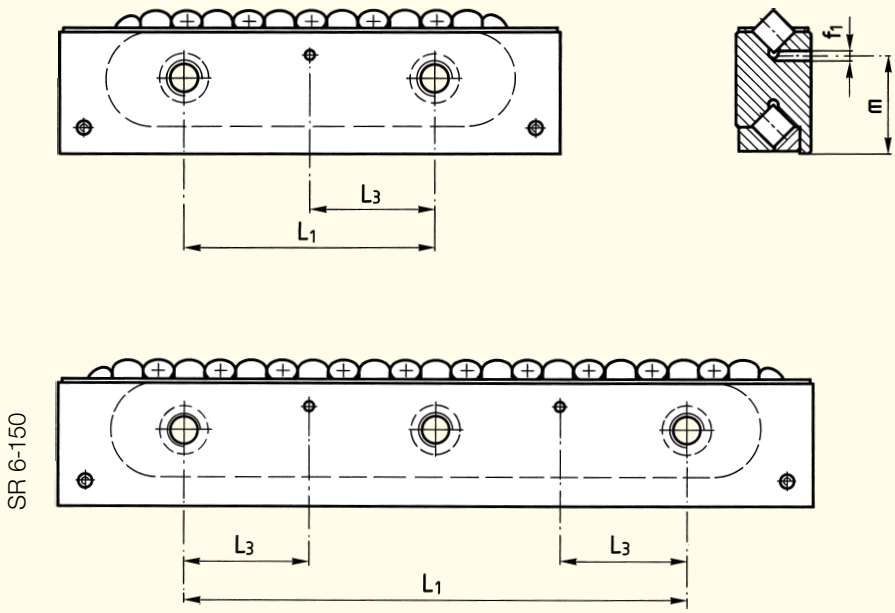

	L_1	L_3	N	Q	d	e	f	f_1	g	m	o	C in N
	1×15	–	6	18	4.4	M3	2.55	–	4	–	1	380
	1×25	12.5	9	28	6	M4	3.3	1.5	4.9	11.8	1.3	850
	1×50	25	15	45	9.5	M6	5.2	2	9.8	19.7	2.5	2150
	2×50	25	15	45	9.5	M6	5.2	2	9.8	19.7	2.5	3750
	1×100	50	26	72	10.5	M8	6.8	3	15.8	32.4	3.5	5850
	1×100	50	32	77	13.5	M10	8.5	3	19.8	40.2	4	10000

Suitable linear bearings: Type R and RD (chapter 5 and 6)

13.4 Fitting dimensions

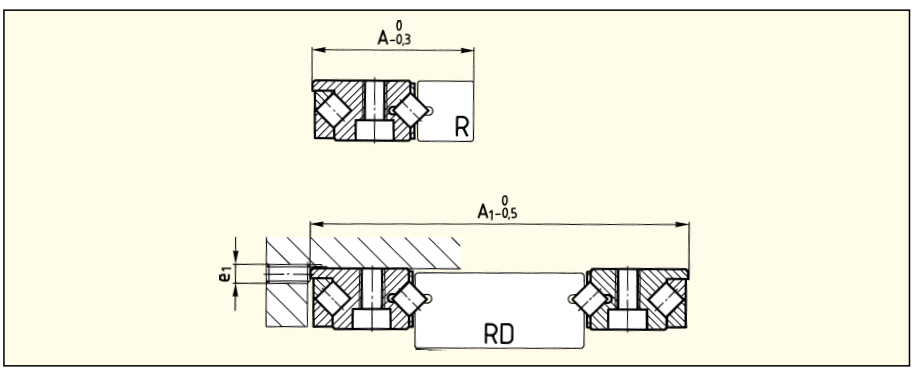

Type	Size	A	A_1	e_1
SR	**2-032**	15.5	37	M2.5
SR	**3-075**	23.5	57	M3
SR	**6-100**	40	94	M5
SR	**6-150**	40	94	M5
SR	**9-150**	61	150	M6
SR	12-200	78	175	M8

13.5 Permissible moments

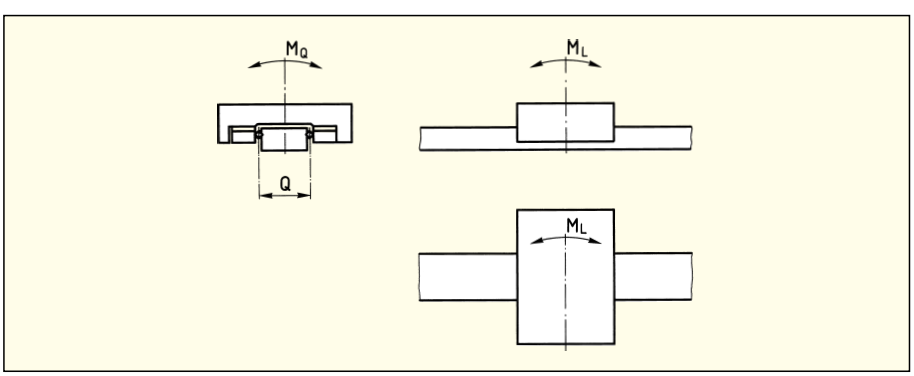

Type	Size	M_L in Nm	M_Q in Nm
SR	**2-032**	3	7
SR	**3-075**	12	24
SR	**6-100**	60	97
SR	**6-150**	112	169
SR	**9-150**	241	421
SR	12-200	553	770

Order numbers in bold face are standard articles and lengths.
Order numbers in normal face are special articles and lengths and are available on request.

SCHNEEBERGER LINEAR TECHNOLOGY

14.1 Recirculating Unit Type NRT and Preload Wedge Type NRV

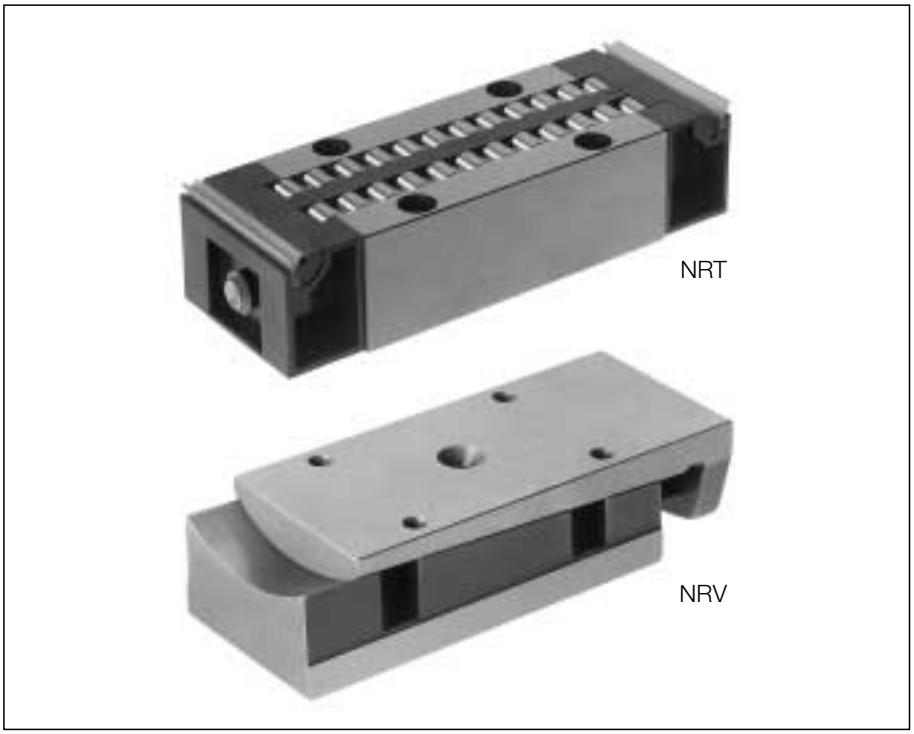

The roller recirculating units NRT are designed for medium to heavy loads, high rigidity and high precision. Together with suitable SCHNEEBERGER linear bearings, adjusting wedge or attaching part ingenious constructions can be realized.

These wedges are used normally to adjust the preload. At the same time, by suitably shaping the cylindrically ground wedge bars, small angular deviations and deformations in the surrounding construction can be compensated. The parts are made from hardened steel.

14.2 Material

NRT
Steel body: through hardened, very precisely ground steel
Recirculation: plastic

NRV
hardened steel

14.3 Standard version

The design of the twin race recirculating unit type NRT, is based on a through hardened, highly accurately ground steel carrier and two plastic components to recirculate the rollers. On each front face there is a double lipped wiper and a lubricating nipple. There is also an additional lubricating hole in the roller return passage.

14.4 Dimension Table Type NRT and NRV

Recirculating Unit NRT

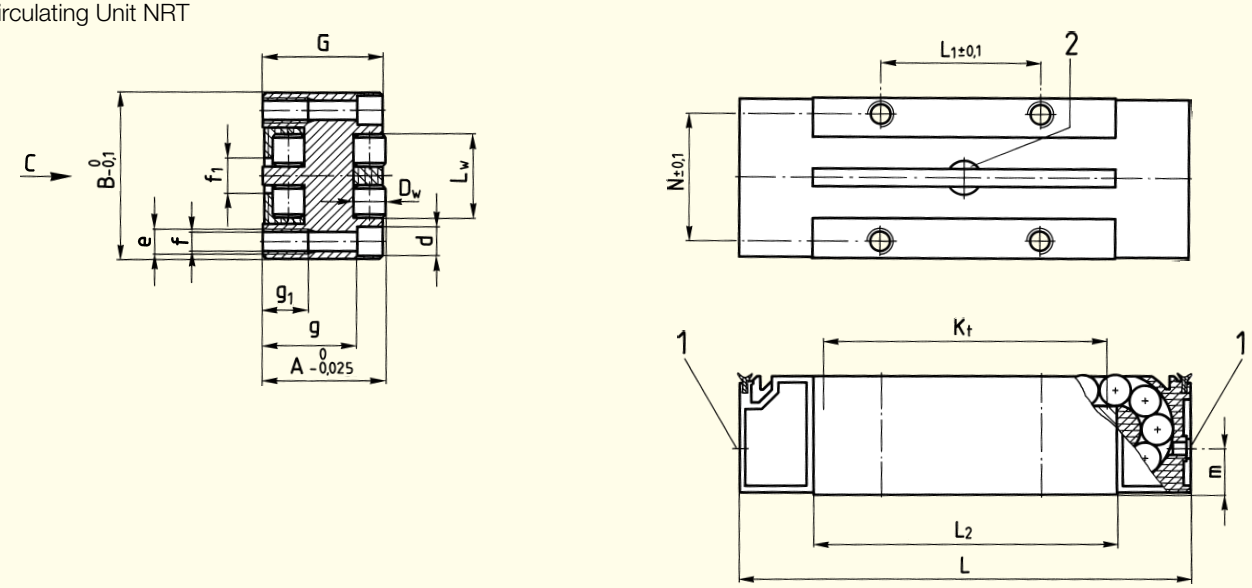

1: With lubricating nipple ∅ 4 type D1a on both sides
2: Lubricating hole

Type	Size	Weight in g	A	B	D_w	G	K_t
NRT	**19077**	185	19	27	5	18.85	45
NRT	**26111**	570	26	40	7	25.85	70
NRT	**38144**	1390	38	52	10	37.8	90

Ordering example: 20 Recirculating Units NRT 19077, matched in sets of 4

Type	Size	Weight in g	A min.	B	H max.	L max.	L_1	L_2
NRV	**19077**	195	16	27	7	72	25.5	22.5
NRV	**26111**	670	25	40	8	105	44	29
NRV	**38144**	1300	30	52	8	130	51	37.5

Ordering example: 20 Preload wedges NRV 19077

Preload wedge NRV

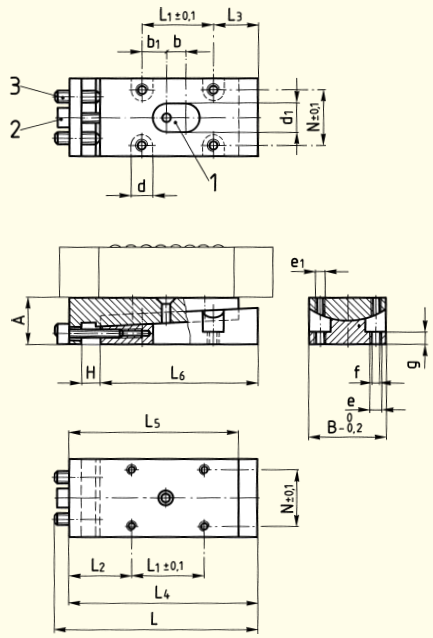

1: Lubricating hole
2: Preload Adjust screw
3: Counter-pressure screws

L	L_1	L_2	L_w	N	d	e	f	f_1	g	g_1	m	C in N
77	25.5	49.2	13	20.6	6	M4	3.3	6	15.5	6	5.3	43000
111	44	75.6	19	30	8	M6	5	9	20	10	10.3	98000
144	51	96.8	26	41	11	M8	6.8	11	29	14	14.5	181000

L_3	L_4 max.	L_5	L_6	N	b	b_1	d	d_1	e	e_1	f	g
16.5	68	61	56	20.6	7	9	7	9	M4	M3	3.3	4.5
21	98	90	83	30	9	17.5	8	11	M6	M4	5	8
28.5	121	113	105	41	10	20.5	11	14	M8	M6	6.8	8

14.5 Special version

Recirculating Units with One-sided Connection for Central Lube System

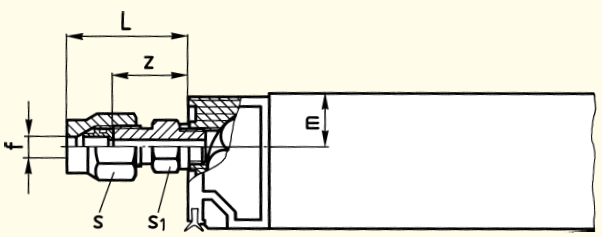

Type	Size	L	f	m	s	s_1	z
NRT	**19077-ZS-2**	13	2	5.3	8	7	10.5
NRT	**19077-ZS-3**	14.5	3	5.3	8	7	11
NRT	**26111-ZS-2**	13	2	10.3	8	7	10.5
NRT	**26111-ZS-3**	14.5	3	10.3	8	7	11
NRT	**26111-ZS-4**	18.5	4	10.3	10	8	14
NRT	**26111-ZS-5**	19	5	10.3	10	8	14
NRT	**26111-ZS-6**	20	6	10.3	12	10	14
NRT	**38144-ZS-2**	13	2	14.5	8	7	10.5
NRT	**38144-ZS-3**	14.5	3	14.5	8	7	11
NRT	**38144-ZS-4**	18.5	4	14.5	10	8	14
NRT	**38144-ZS-5**	19	5	14.5	10	8	14
NRT	**38144-ZS-6**	20	6	14.5	12	10	14

Ordering example: 4 Recirculating Units NRT 26111-ZS-2

14.6 Preload Adjustment

Preload Wedge Type NRV

These wedges are used normally to adjust the preload. At the same time, by suitably shaping the cylindrically ground wedge bars, small angular deviations and deformations in the surrounding construction can be compensated. The parts are made from hardened steel.

Adjustment Figures

Type	Size	Δ A*	Per Thread Revolution
NRV	**19077**	0.35	0.035
NRV	**26111**	0.4	0.0625
NRV	**38144**	0.4	0.075

*Max. difference in height of the preload wedge

SCHNEEBERGER LINEAR TECHNOLOGY

15.1 Tolerances

Along with the geometrical accuracy of the components used, the running and positioning accuracy are dependent on the careful alignment of the linear bearings on an adequately machined, low deformation base construction.

Parallelism Tolerances

SCHNEEBERGER linear bearings are manufactured in 3 quality grades:

NQ Normal quality; corresponds to standard requirement for precise anti-friction guideways in machine construction.

SQ Special quality; foreseen for high requirements. It can be supplied for all types independent of their length.

SSQ Super special quality for the most stringent requirements. Can be supplied for all types up to a length of 1200 mm. The quality grades SQ and SSQ require increased accuracy and rigidity in the base construction.

The relative tolerance value (Δ) for the parallelism of the running surfaces to the supporting and abutting surfaces can be read from the diagram below:

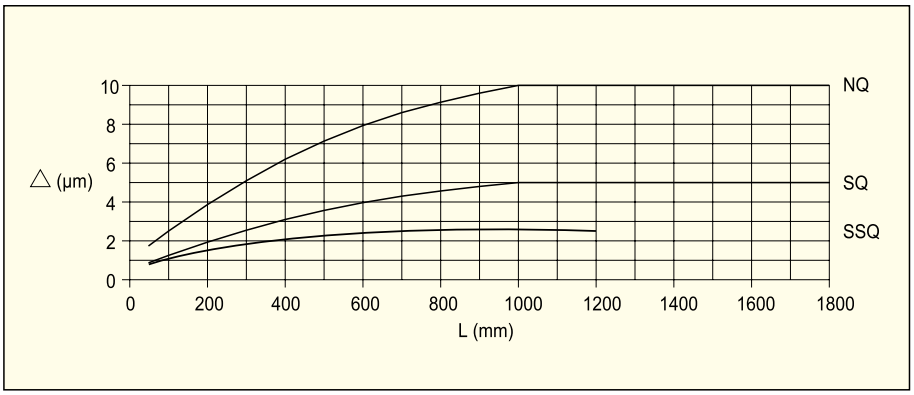

To achieve a high running accuracy with preloaded guideways not only the parallelism is important but also, the distance of the supporting surface to the running surface. This dimension is therefore on SCHNEEBERGER linear bearings, also very closely toleranced (± 0.005 mm).

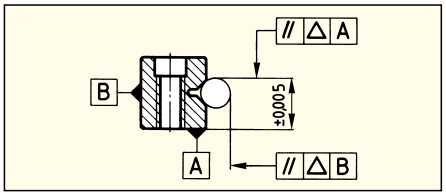

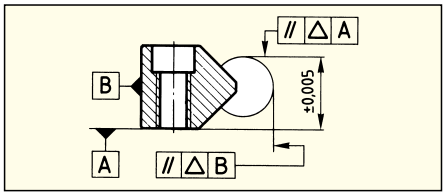

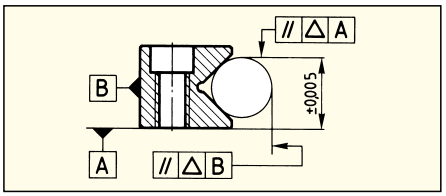

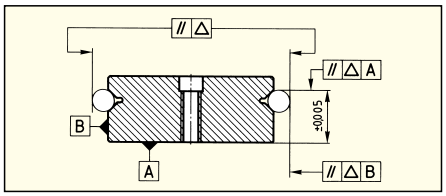

Length and Attaching Hole Pitch Tolerances

Length	$L \leq 300$:	± 0.3 mm
Length	$L > 300$:	± 1‰ of L
Pitch	L_1:	± 0.3 mm
Dimension	$x_n \leq 350$:	± 0.3 mm
Dimension	$x_n > 350$:	± 0.8‰ of x_n

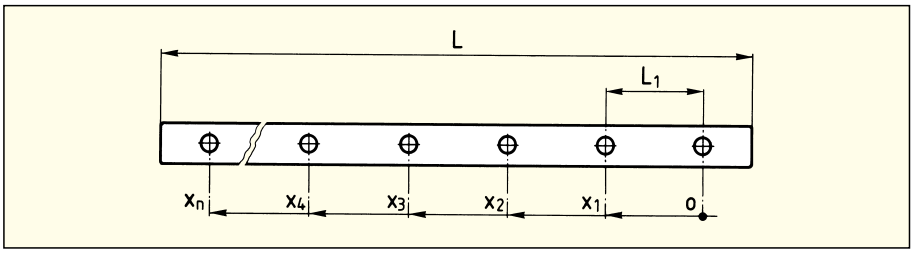

Tolerance of Multi-section Linear Bearings; ground together (ZG)
If the required length of the guide is greater than the normal maximum single piece length of the guideway, then standard lengths can be ground together within 0.002 mm. In this case the tolerance for length L is within ±2 mm.
With SCHNEEBERGER linear bearings, ground together, the numbering at the junction must be observed.

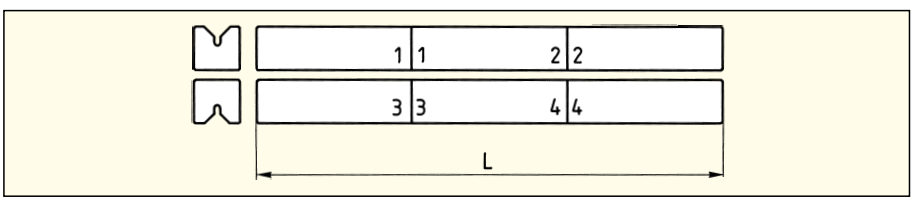

Tolerance of Height Matched Linear Bearings (HA)
With gravity loaded guides which are matched for height, a tolerance of ±0.01 on dimension $A_{-0.3}^{0}$ from A_1 to A_2 is held and the parts are marked accordingly. If several sets are supplied they are numbered consecutively.

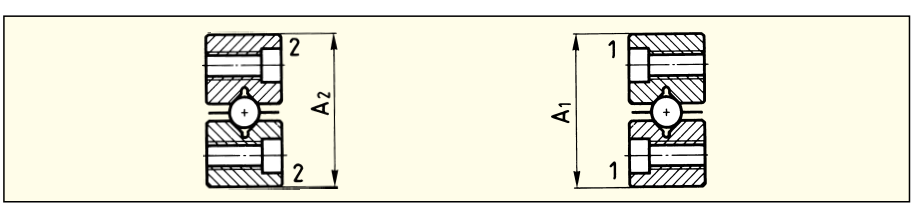

Tolerances of Matched Recirculating Units (GP)
If two or more recirculating units are arranged one behind the other, then they should be ordered with the suffix «matched». They are then selected in groups and marked accordingly.

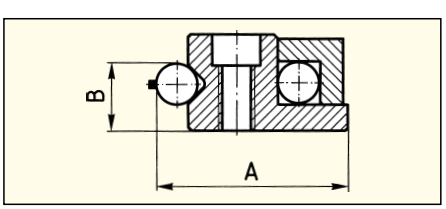

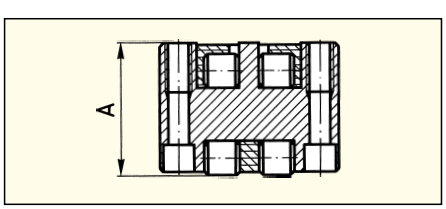

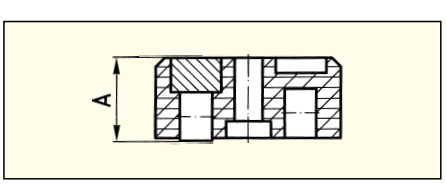

Type	Manufacturing Tolerances A	Manufacturing Tolerances B	Group Tolerances in µm with Matched Sets A		Group Tolerances in µm with Matched Sets B
SK 1+2 SR 2	0 –0.1	±0.005	2		2
SK 3–12 SKC 3+6 SKD 6–12 SR 3–12	0 –0.1	±0.005	3		3
			Grading	Marking	
NRT	0 –0.025	–	0 to – 5 – 5 to –10 –10 to –15 –15 to –20 –20 to –25	Red Blue Yellow Green White	–

Marking:
With the exception of type NRT, all matched recirculating units in the same group are given a number i. e. same number = same tolerance group

15.2 Materials

SCHNEEBERGER **linear bearings** are normally manufactured from tool steel No. 1.2510 or 1.2842. The hardness is between 58 and 62 HRC, or min. 54 HRC for certain corrosion resistant models (material No. 1.4125).
The whole SCHNEEBERGER **rolling element range** is made generally from bearing steel No. 1.3505. The hardness is between 58 and 64 HRC, or min. 56 HRC for corrosion-resistant models.
For SCHNEEBERGER recirculating units all supporting components are made from bearing steel No. 1.2510 or 1.2842.
The **retainers** and **recirculating components** are, according to the model, made from steel, plastic or surface treated aluminum – for details see the individual Tables of Dimensions.
For applications requiring a special corrosion protection, because of a high relative humidity or an increased resistance against wear of the surfaces is required, Linear bearings and recirculating unit can also be supplied in a hard-chromed version. The essential advantages of this coating applied by electro-plating are:

- Very good corrosion protection
- Very high resistance against wear and very high load bearing capacity of the surface
- Exceptional adhesive power and uniform distribution of the thickness of the coating
- Good sliding and therefore emergency running characteristics, because of the micro-pearl structure

15.3 Permissible Operating Temperatures

SCHNEEBERGER linear bearings and recirculating units can be used at temperatures between – 40° C and + 80° C. Temperatures of up to + 120° C are premissible for short periods.
For applications under higher temperatures special versions are available. Please consult us.

15.4 Lubrication

SCHNEEBERGER anti-friction guideways should be lubricated to protect them against corrosion and wear and tear. The guides and recirculating units should not be heavily lubricated. One lubrication can – according to the loading – suffice for years.
Generally, bearing grease on a lithium saponified base (bearing grease KP2K per DIN 51502 respectively DIN 51825) should be used. Drip feed oiling, occasional oiling, with oil nipples or lubricating by means of overspill oil are sufficient. To achieve the lowest rolling friction resistance, mineral base oils are recommended (CLP or HLP; viscosities of ISO VG 15 to 100 per DIN 51519).
The lubricant is normally applied between the linear bearings and the recirculating units or, sometimes, through the standard lubricating holes or nipples in the recirculating units. If, for design reasons, this is not possible (e.g. vertical fitting), linear bearings with lubricating holes can be supplied. Oil mist lubrication systems are especially recommended which, with a small over-pressure, help to keep the guides clean. Environmental conditions however restrict their use.
Soluble oil or coolant emulsions should, on the other hand, be kept away from the guides as they dilute or wash away the lubricant. In addition, coolant emulsions tend to dry-out and become tacky. Lubricants with solid base additives are also unsuitable.
Lubrication intervals depend on various factors such as the loading, ambient conditions, etc. Experience has shown that lubricating 2–5 times at equal intervals during the calculated operational life suffices.
With very long guideways, we recommend that, before they are put into operation, lubricant is distributed along the linear bearings in order to prevent the recirculating units from running dry.

15.5 Permissible Velocities and Accelerations

Under normal fitting conditions SCHNEEBERGER anti-friction guideways can be used at velocities of up to 50 m/min. and accelerations of 50 m/s^2. Higher velocities are possible under certain conditions but need, however, light and stable cage constructions. They are also dependent on the size, lubrication, fitting location, preloading, loading and on the type of linear bearing selected.

Under normal fitting conditions SCHNEEBERGER recirculating units can be used up to the following speeds:
50 m/min. for NRT
120 m/min. for SK/SKD, SR
The maximum acceleration is 50 m/s^2.
Higher velocities and accelerations are possible under certain conditions. They depend on the size, lubrication, mounting position, preload, loading and the type of recirculating unit selected.

15.6 Sealing and Guarding

Falling swarf, fine grain cutting particles, dirt blown-in while cleaning and any other kind of contamination are a danger for the running characteristics and operational life of the anti-friction guideways.
The amount of effort expended to protect the SCHNEEBERGER linear bearings and recirculating units should conform to the operating conditions of the case in question. The use of SCHNEEBERGER frictionless tables as standard equipment can be especially economical.
Due to their running geometry, balls are less sensitive to dirt than rollers. Wherever there is an increased danger of the ingress of dirt, the use of balls should be taken into consideration. Note however the lower load carrying capacity of balls as opposed to rollers and needles. Examples of sealing and guarding can be found in the Design Information (see chapter 16.5).
Recirculating units NRT and SK/SKD sizes 3 to 12 have replaceable plastic wipers as standard fittings. If necessary, the design should incorporate additional seals or guards (see chapter 16.5).

15.7 Friction, Running Accuracy and Smoothness

In the manufacture of SCHNEEBERGER anti-friction guideways the requisites for perfect running smoothness are created. Great attention is paid especially when the junctions of ground together linear bearings are manufactured. The entries and exits for protruding cages are also given great attention. Great attention is paid to the passage of the rolling elements from the unloaded into the loaded zone. The SCHNEEBERGER plastic and plastic composite cages also play an important part. For guides with cages, coefficients of friction range from 0.0005 to 0.003 and, with travel-independent recirculating units, up to 0.005.
For successful application special care must be taken with careful alignment of the linear bearings on an adequately machined, low deformation base.
You will find further details in the following section.

SCHNEEBERGER linear bearings are not load carrying construction components, but are designed only as guide units. They are, with a few exceptions, through-hardened.

16.1 Types of Fitting

All applications where the direction of motion is horizontal are designated horizontal fitting. All applications where the direction of motion deviates from the horizontal are designated vertical fitting.

The **pre-loaded guideway** can be loaded by moments and forces in any direction. The rigidity and running accuracy can be influenced by changing the preload.

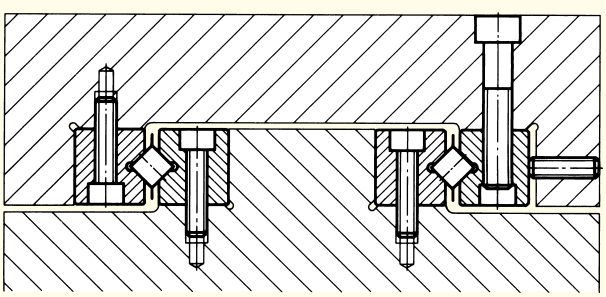

Preloaded anti-friction guideway with type R or RNG linear bearings

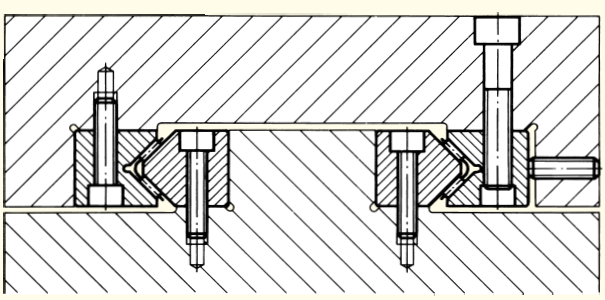

Preloaded anti-friction guideway with type N/O

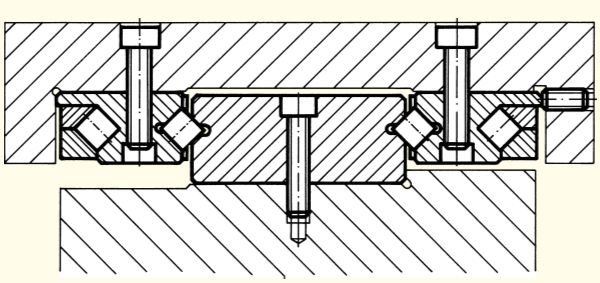

Preloaded anti-friction guideway with type RD linear bearing and type SR or SK recirculating units

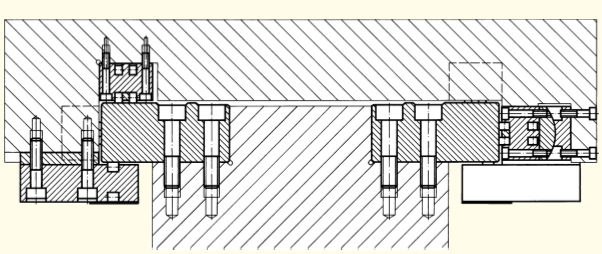

Preloaded anti-friction guideway with special linear bearings and type NRT recirculating units

Gravity loaded Guideways can, in most cases, only be used with loads acting vertically on the guideway. They accept heavy loads and are usually easy to fit. They are especially advantageous when
– lateral expansion due to heat has to be compensated
– large supporting widths have to be bridged
– no deformation may occur through bracing of the base construction.
For gravity loaded fittings the two pairs of linear bearings must be ordered with dimension A matched for height (–HA).

Gravity loaded anti-friction guideway with type R and special linear bearings

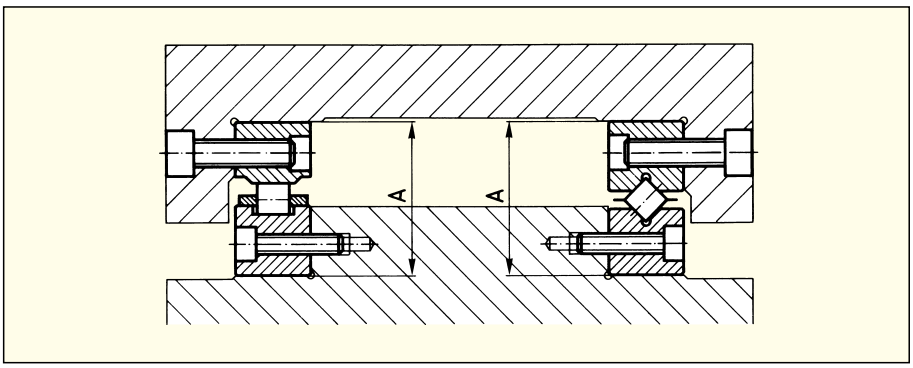

Suspension gravity loaded fitting with type N/O and special linear bearings (specify mode of fitting when ordering). In this case dimensions A and B have to be matched for height.

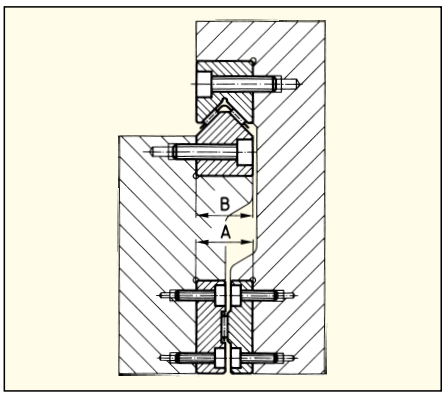

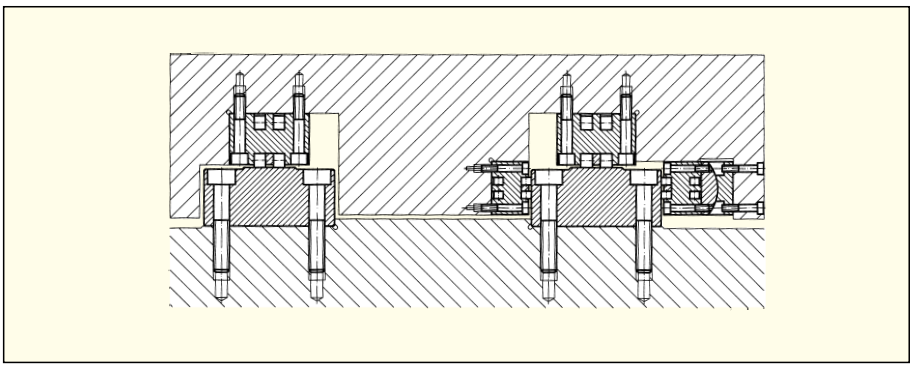

Gravity loaded anti-friction guideway with special bearings and type NRT recirculating units

16.2 Attaching Linear Bearings and Recirculating Units

SCHNEEBERGER linear bearings can be attached to the base construction in 2 ways:

A: Using the threaded holes
B: Using the through holes

Whenever possible method A is to be preferred. It permits a stronger fitting and is, according to the diameter of the holes in the base construction, less sensitive with regard to deviations in the hole pitch. It can, with certain adjusting methods, be the only way possible to attach the linear bearing after the preload has been set.
Somewhat more «freedom of movement» is given by method B by using the special attaching screws, which are available for practically all SCHNEEBERGER linear bearings. See the tables under the relative linear bearings for sizes.

Linear Bearings

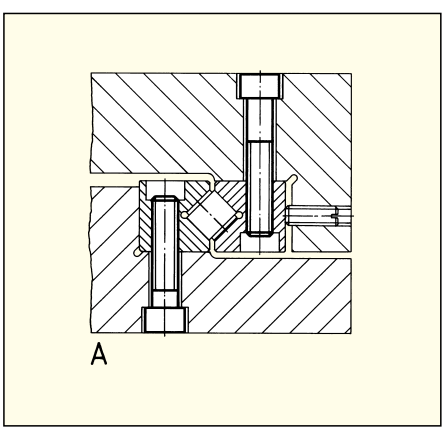

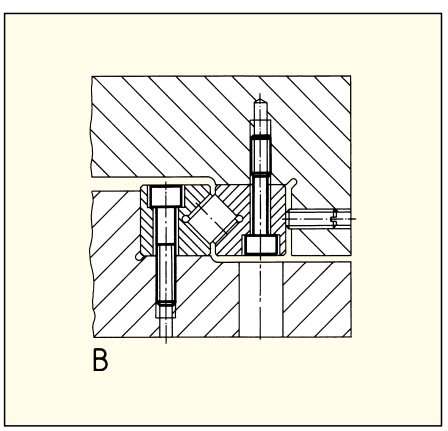

Recirculating Unit

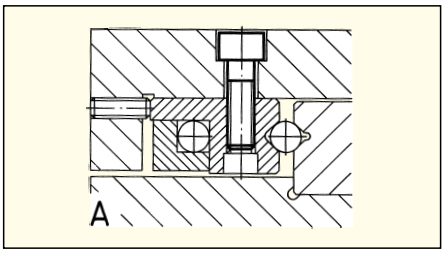

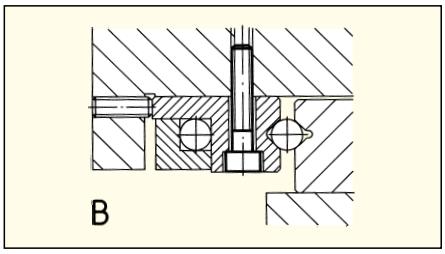

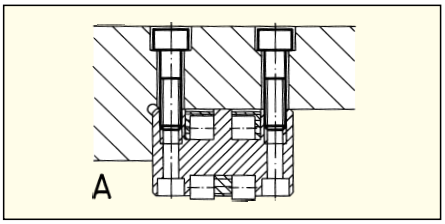

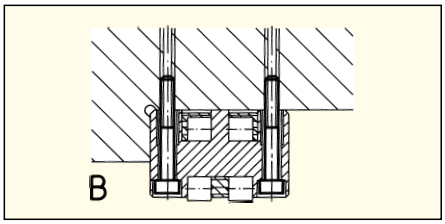

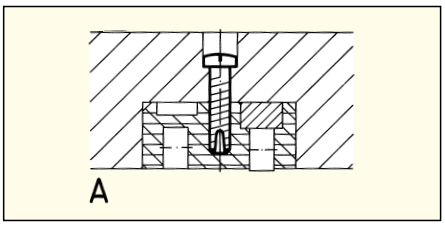

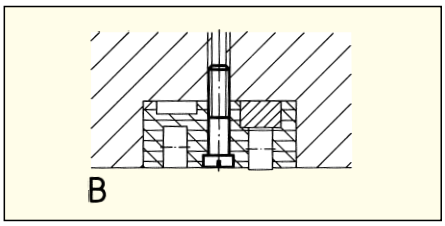

Self tapping screw

Capscrew

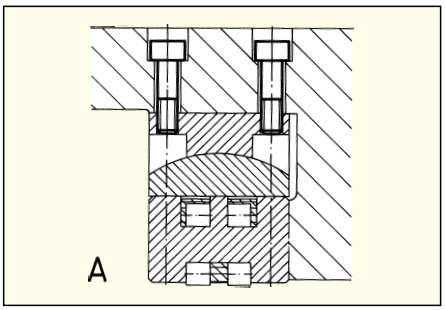

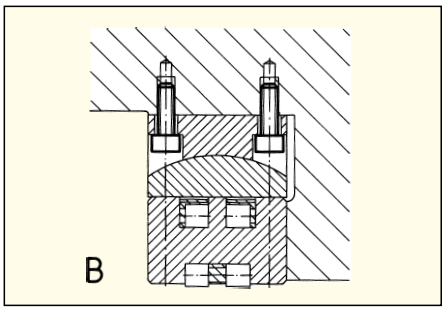

Recommended tightening torques for attaching screws
Below is a table of recommended tightening torques for attaching screws. These values are valid for screws with a oil protection or oiled. If grease containing MoS_2 is applied to the attaching screw, the torque can drop to half of the value indicated in the table below.

Strength grade: 8.8

Size	Tightening torque (Ncm) Attaching screws DIN 912	Special attaching screws GD, GDN
M 2	35	28
M 2.5	73	58
M 3	128	102
M 4	290	232
M 5	575	460
M 6	990	792
M 8	2 400	1 920
M 10	4 800	3 840
M 12	8 300	6 640
M 14	13 200	10 560
M 16	20 000	

16.3 Preloading Linear Bearings

The **amount of preload** is set in accordance with the application of the SCHNEEBERGER linear bearings and recirculating units and is largely dependent on the rigidity of the base construction. It is normally between 2 and 20 % of the permissible load C.

Linear Bearings
The playfree setting of a guideway is normally executed using setscrews. A playfree, uniform motion can only be achieved when preloading is made at that point where the balls or rollers are. For this purpose the guide should be moved in sequence as each setscrew is adjusted.
With protruding cages the shorter linear bearing should preferably be adjusted.
For economic and practical purposes the following methods are normally used:

A: Setscrews

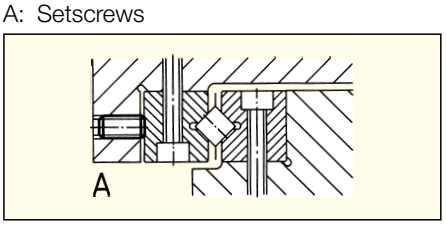

Further possibilities are:
B: Adjusting bar
C: Adjusting wedge
D: Adjusting cylinder
E: Longitudinal wedge
F: Double longitudinal wedge

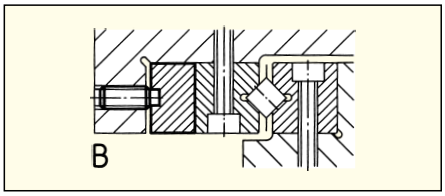

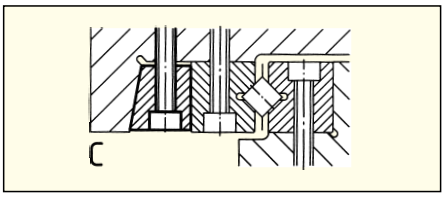

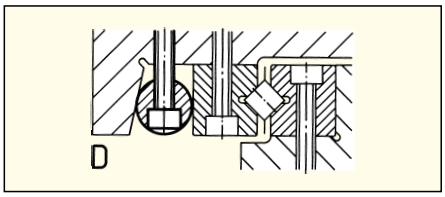

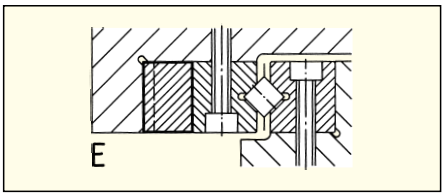

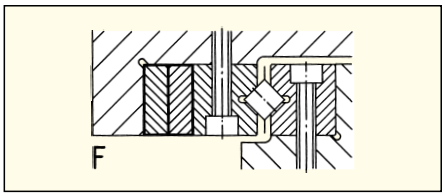

When setscrews are used at least one setscrew must be used per attaching screw. The setscrew thread should match the one in the SCHNEEBERGER linear bearing.

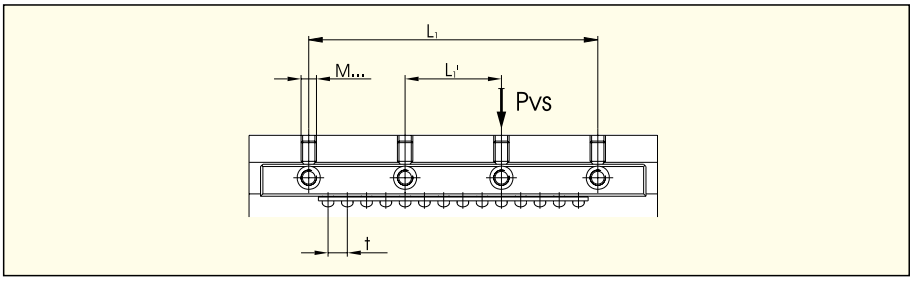

Example for a calculation

Linear bearing R 3:		L_1' = 25 mm
Roller cage type AC 3:		t = 5 mm; C = 130 N
Adjusting screw:		M4
Factor f:	(for rollers = 1; for balls/needles = 2)	f = 1
Preload p:	(2–20% of C)	p = 10%

Forces per adjusting screw Pvs = $L_1'/t \cdot C \cdot p/100 \cdot f$ = 25/5 · 130 · 10/100 · 1 = 65 N
Recommended tightening torques **Mds** = Pvs · a = 65 · 0.0469 = **3.05** Ncm

Tapped hole	M2	M2.5	M3	M4	M5	M6	M8	M10	M12	M14	M16
a [cm]:	0.0238	0.0294	0.0350	0.0469	0.0580	0.0699	0.0926	0.1152	0.1378	0.1591	0.1811

Recirculating Unit

The following preloading methods can be used to achieve a playfree guideway respectively to increase the rigidity:

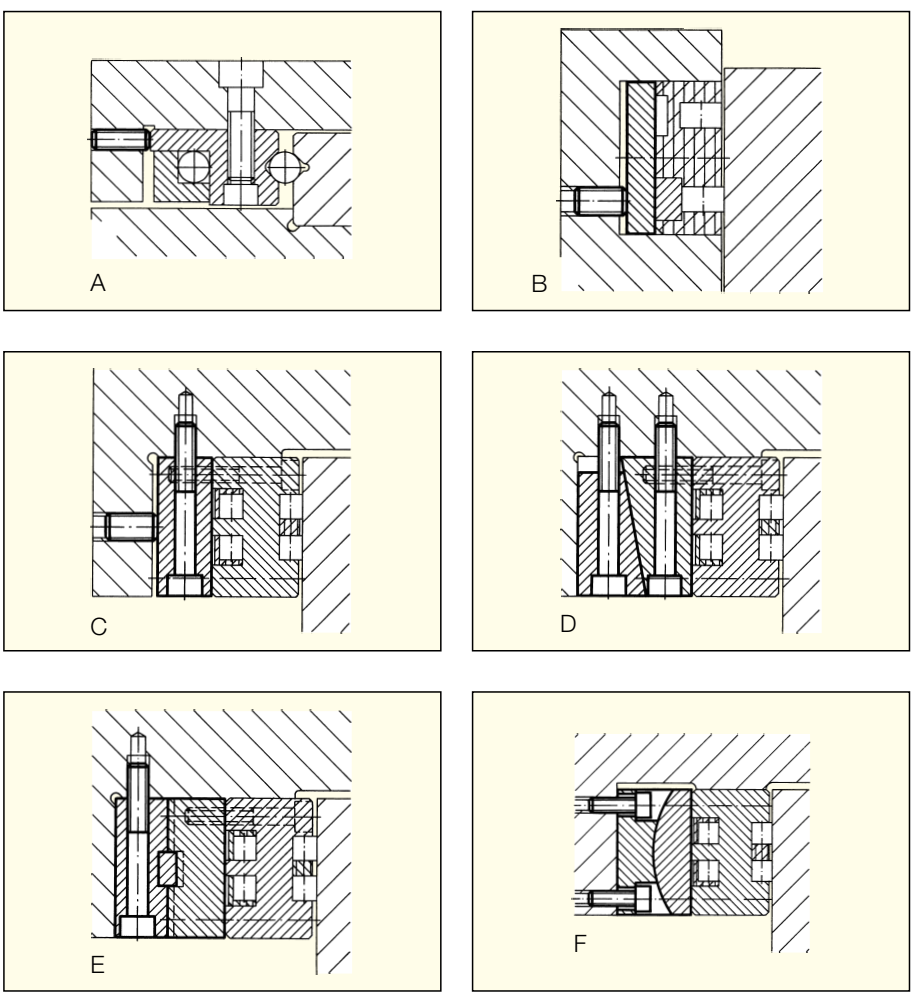

A: Setscrew
B and C: Setscrew with adjusting plate
D: Adjusting wedges
E: Double longitudinal wedge
F: Preload wedge, type NRV (see chapter 14)

The lengthwise **adjustment** on recirculating units must always be within the load carrying length K_t. The crosswise arrangement of the setscrews can be seen in the drawings on page • 70.

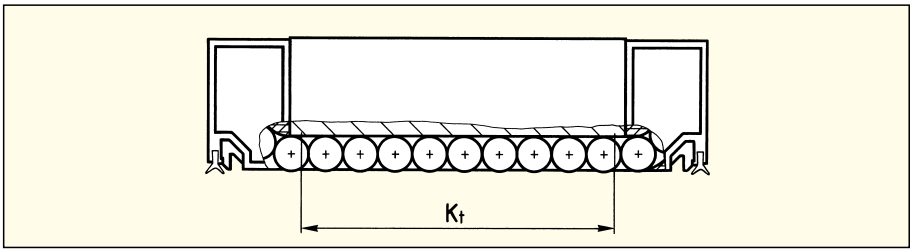

Linear Bearings and Recirculating Units

The preload on the setscrews can be set uniformly and quantitatively with a torque wrench. The optimal torque must be determined by trial and error. When adjusting wedges or adapter plates are used, the ideal preload has to be determined over the total elastic deformation δ_A (see chapter 17.2).
The playfree setting with heavy loads can be made more sensitively when the load is balanced by lifting it.
When adjusting a SCHNEEBERGER anti-friction guideway having plastic type EE roller cages, the cage must first be compressed slightly before the rollers make contact.
Fundamentally, preloading increases the rigidity of an anti-friction guideway. A high preload requires, however, a stable base construction. Otherwise, angular errors will be created which cause unfavorable end pressure on the rollers or needles which, in turn, has a negative effect on the load carrying capacity.
With type NRT recirculating units the use of SCHNEEBERGER type NRV preload wedges offers a practical solution which can partially compensate angular errors or deformations of the base construction.

17.4 Design of Base Unit

The advantages of SCHNEEBERGER linear bearings and recirculating units are best exploited on a rigid, low-deformation, accurately machined machine construction. The surface quality of the supporting surfaces has no direct influence on the operational behavior of the linear bearings. We recommend, however, that the supporting and abutting surfaces should be manufactured with a surface roughness of between N 5 and N 7, in order to achieve the desired flatness and parallelism tolerances.

Linear Bearings

The **angular error** of the supporting surfaces should not exceed 0.3 µm per mm and the parallelism must correspond to that of the SCHNEEBERGER linear bearings. These **parallelism tolerances** are also valid when recirculating units are used.

The angular error resulting from **offset in height** or elastic deformations may not exceed the following:

Rollers (R, RN, RNG)	0.3 µm/mm
Needles (N/O)	0.1 µm/mm

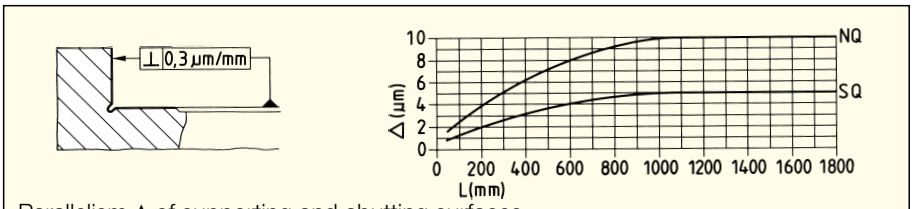

Parallelism Δ of supporting and abutting surfaces

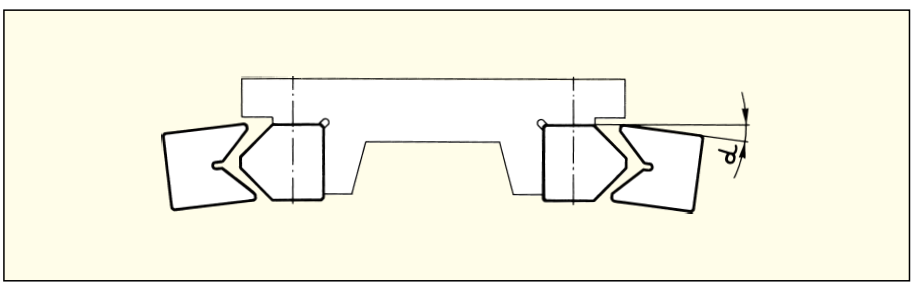

The above guidelines represent the recommended support structure for SCHNEEBERGER bearing assemblies. Slight deviations from these guidelines are permissible to lower manufacturing costs of your structure. However, undesirable disadvantages such as edge pressure, cage creep, higher friction, noise and a shorter operational life may result from these deviations. Through this kind of adaption to operating requirements optimum economic solutions can result.

Recirculating Units

The **angular error of the supporting surfaces** should not exceed 0.3 µm per mm.

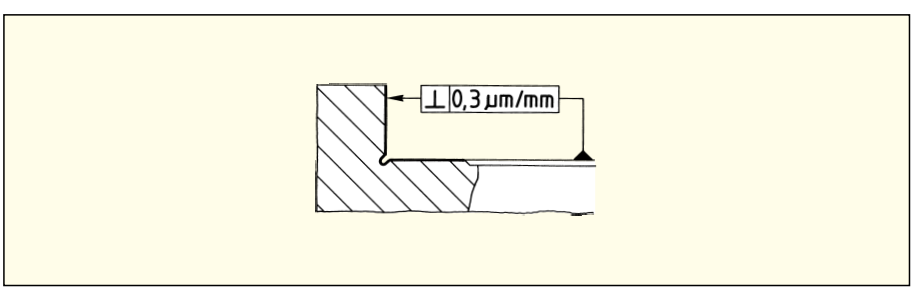

The **parallelism tolerance** of the supporting and abutting surfaces can be read from the diagram below.
For tolerances of linear bearing supporting and abutting surfaces, see above.

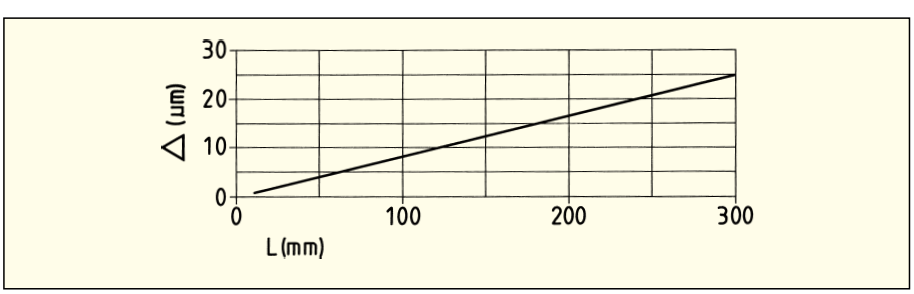

The angular error resulting from **offset in height** or elastic deformation should not exceed the following values:

ECO-ROLL	0.6 µm/mm
SR, NRT	0.3 µm/mm
SK, SKD	3 µm/mm

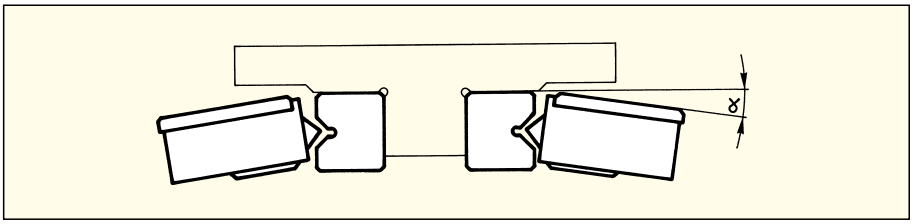

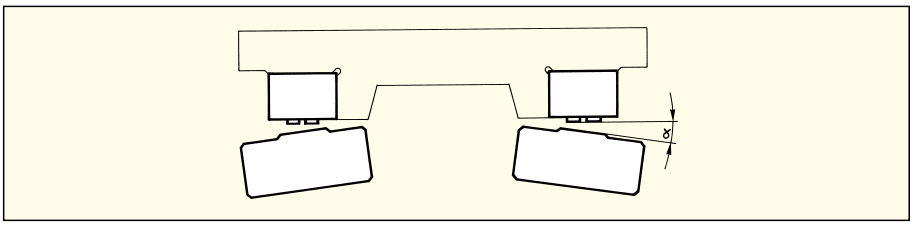

In addition the following **guidelines** should be observed:

When the NRT recirculating units are combined with the SCHNEEBERGER preload wedges type NRV, it is essential that the recirculating unit is aligned with the abutting surface. In addition the preload wedge must also be aligned with the recirculating unit.

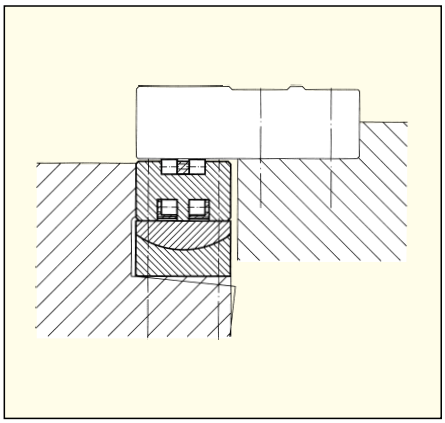

The above guidelines represent the recommended support structure for SCHNEEBERGER bearing assemblies. Slight deviations from these guidelines are permissible to lower the manufacturing cost of your structure. However, undesirable disadvantages such as edge pressure, higher friction, noise and a shorter operational life may result from these deviations. Through this kind of adaption to operating requirements optimum economic solutions can result.

16.5 Design of Seals and Guards

Linear Bearings

In chapter 15.6 we have already mentioned the importance of seals and guards so that here we shall only mention design factors.

Wipers suffice in places where there is only a small amount of dirt present. Generally their braking effect can be ignored. When endpieces with wipers are used the limitation in stroke length must be noted, as the wiper should not travel further than the guide it is wiping.

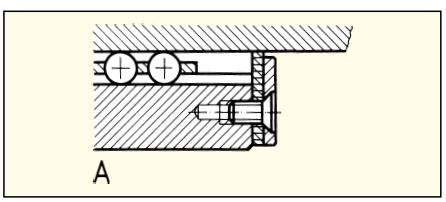

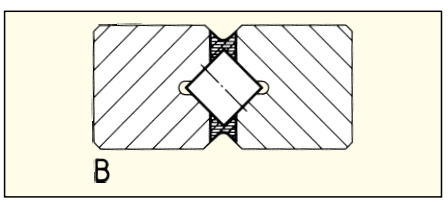

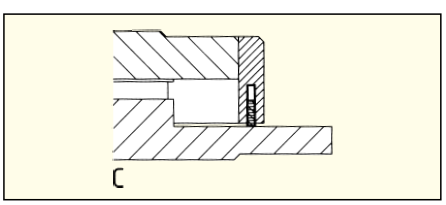

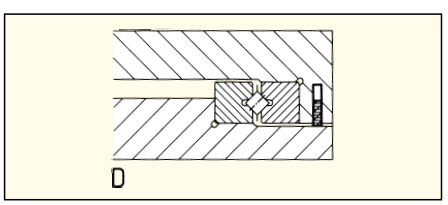

A: Endpiece with wiper
B: Plastic roller cage, type EE (only sizes R 6 and R 9)
C: Wiper on end face
D: Wiper at side

Guards are used where there is a danger that damage can be caused to the guides. While wipers only remove the dirt from the guides in the zone where they move, guards provide the possibility to protect them also against the lateral ingress of dirt.

E: Diverting swarf and coolant with guards
F: Labyrinth seals often provide effective and economic protection.
They must, however, be properly designed

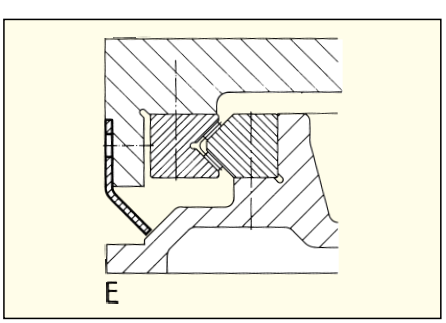

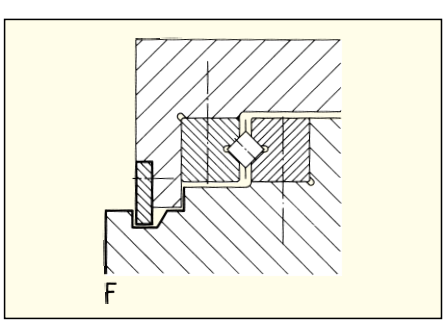

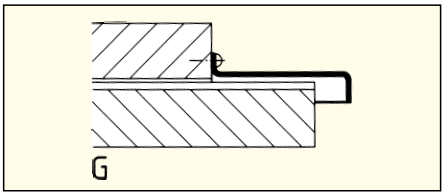

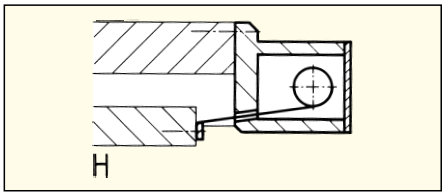

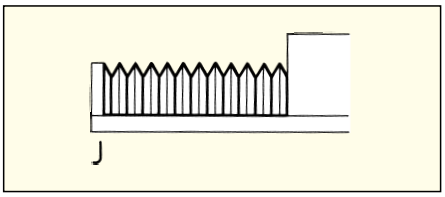

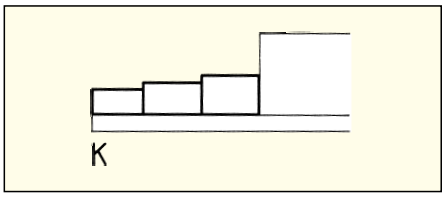

G: Simple metal cover
H: Self-tensioning guards
J: Bellows at top and bottom
K: Telescopic cover
Overpressure e. g. with compressed air can also help to prevent contamination. The overpressure must, however, also be present during work breaks.

Recirculating Units

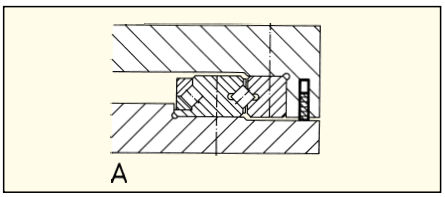

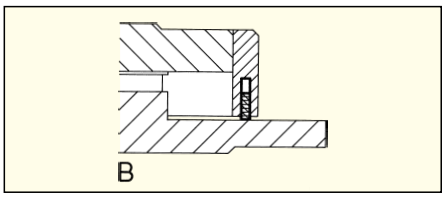

A: Lateral wipers

B: End wipers

Guards are used where there is a danger that damage can be caused to the guides. While wipers only remove the dirt from the guides in the zone where they move, guards provide the possibility to protect them also against the lateral ingress of dirt.

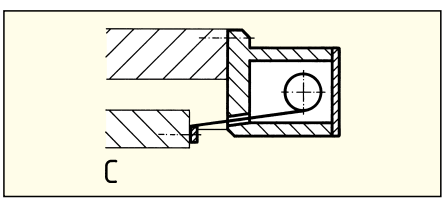

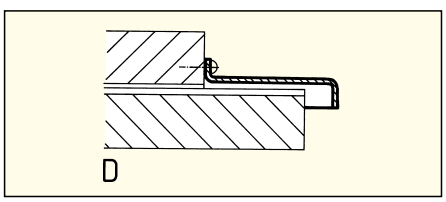

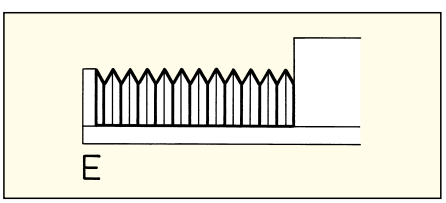

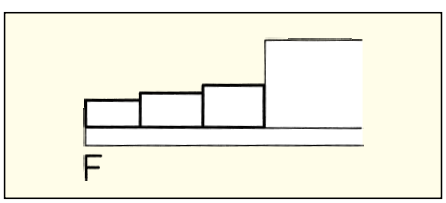

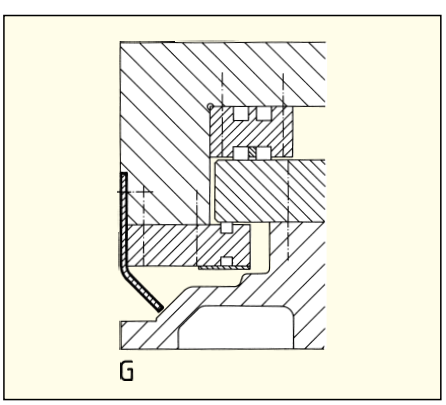

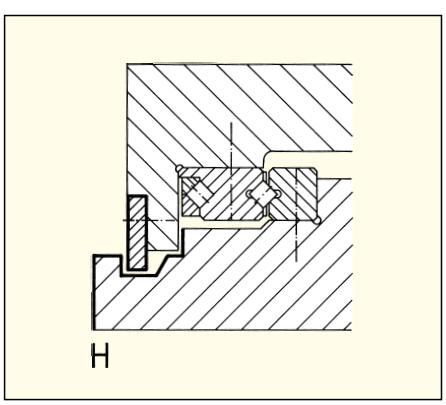

C: Self-tensioning guards
D: Simple metal cover
E: Bellows at top or bottom
F: Telescopic cover
G: Diverting swarf and coolant with guards
H: Labyrinth seals often provide effective and economic protection.
They must, however, be properly designed.

Overpressure e. g. with compressed air can also help to prevent contamination. The overpressure must, however, also be present during work breaks.

16.6 Assembly

With clean, careful preparation, you will achieve a perfect anti-friction guideway in the most economical manner.

The following instructions are valid in a general sense for all types of SCHNEEBERGER linear bearings.

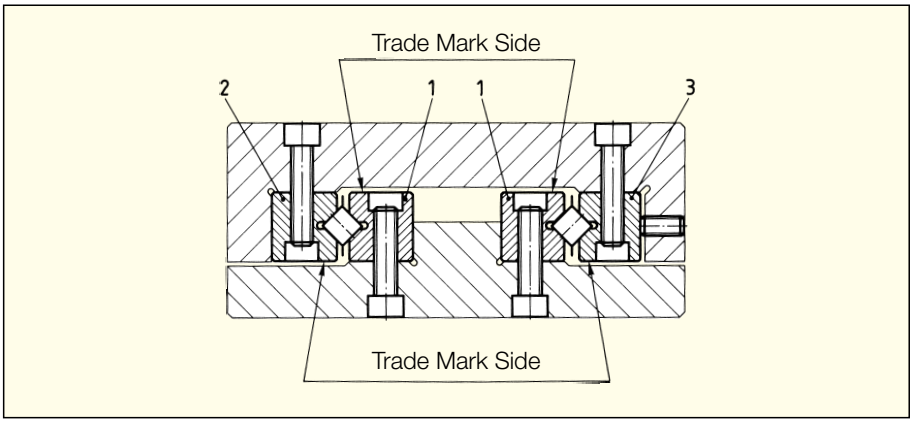

- At least with linear bearings which have been ground together the attaching holes in the base should be located directly from the holes in the linear bearings. By using the special attaching screws, differences in hole pitch can be compensated for in most cases. The side with the trade mark may not be used as the supporting surface
- To ensure perfect seating of the SCHNEEBERGER linear bearings deburr all holes with a fine stone after drilling
- Wash the linear bearings before fitting with a cleaning agent. Oil lightly to avoid secondary damage
- Press the fixed pair of linear bearings (1) onto the base using a suitable tool and secure with the attaching screws. The use of a torque wrench is recommended

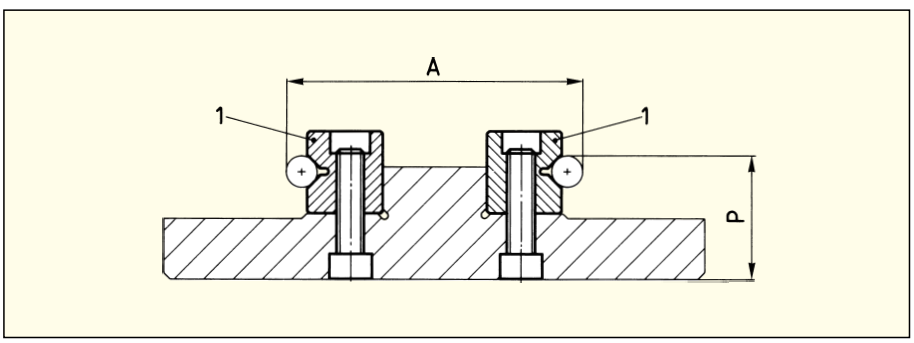

- Check the parallelism (Δ A and Δ P) of the fixed pair of linear bearings. The measured parallelism must be within the linear bearing tolerance (chapter 15.1)
- Fit fixed linear bearing (2) of opposite pair
- Fit adjusting guide (3) and lightly tighten the attaching screws
- Slide in cage with rolling elements and position exactly
- Fit endpieces
- Adjust linear bearing until desired preload is achieved and assembly is playfree (chapter 16.3)
- Secure the attaching screws on the adjusting linear bearing (3)

When using type NRV preload wedge it is essential that both counterscrews are secured alternately with the same torque after the preload has been set.

The setting of the preload with the preload screws should be executed in the following steps. Please adjust the screws sequentially according to the numbers.

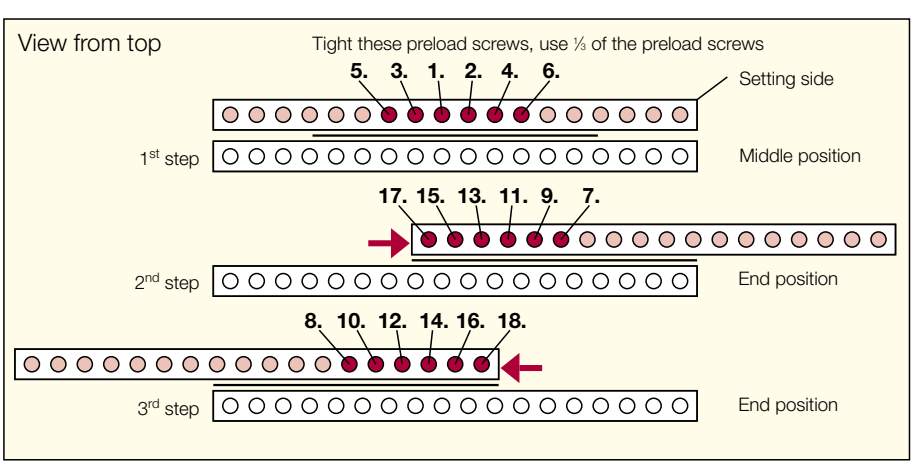

16.7 Layout of SCHNEEBERGER Linear Bearings and Recirculating Units

The versatile range of application of SCHNEEBERGER linear bearings has produced a multitude of different types of linear bearings; see product overview, chapter 1. The differing requirements placed on anti-friction guideways using recirculating units have produced recirculating units of various shapes; see Product Overview, chapter 1. Smooth running, velocity, load carrying capacity, operating conditions (heat; lubrication; dirt), and the construction as well as the ease of motion are decisive for the selection of the most suitable model.

Most important for the selection of size and length of the guideway are the load carrying capacity, operational life and rigidity.

The load carrying capacity can be increased when rollers or needles are used as opposed to balls. Decisive within the roller and needle types is, in the first place, the length of the rolling element. With regard to rigidity, many small rolling elements are better than a few big ones. Economic factors are also decisive for the type of linear bearing. In this consideration, balls are more economical than rollers or needles.

Linear Bearings

With regard to stroke and length and also the side spacing Q on the linear bearings, the following rules should be followed: For the linear bearing length L following factors are relevant: the cage length K and the stroke H as well as the kinetic factors, according to which the cage always moves half the stroke of the moving linear bearing.

As a guideline we recommend:

– For the relationship of stroke to linear bearing length:

$$\frac{H}{L} \leqslant 0.7 \quad \text{(for } H \leqslant 400 \text{ mm)}$$

$$\frac{H}{L} \leqslant 1 \quad \text{(for } H > 400 \text{ mm)}$$

– For cage length K

$$K \leqslant L - \frac{H}{2}$$

– For the relationship cage length K to linear bearing spacing Q; CL to CL

$$\frac{K}{Q} \geqslant 1$$

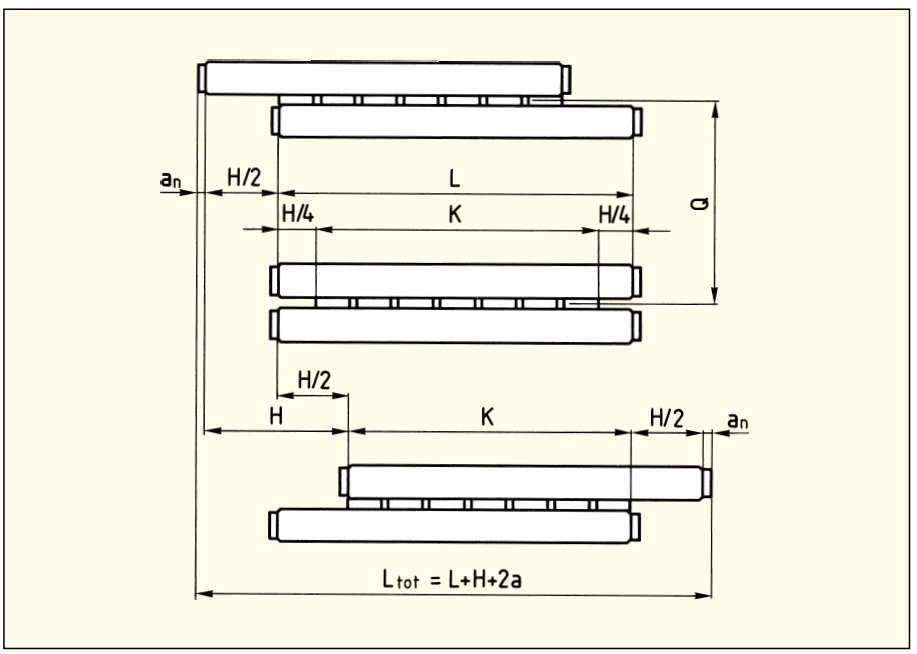

K = Cage length
H = Stroke
L = Length of linear bearing
Q = Linear bearing spacing; CL to CL
a_n = Endpiece thickness
L_{tot} = Necessary fitting space

Protruding cages are practical when a short table is to be moved on a long guideway. They ensure that the upper section is always supported over the whole length, which is favorable for the load carrying capacity and the rigidity. In this case short linear bearings with rounded entries must be ordered (–EG).

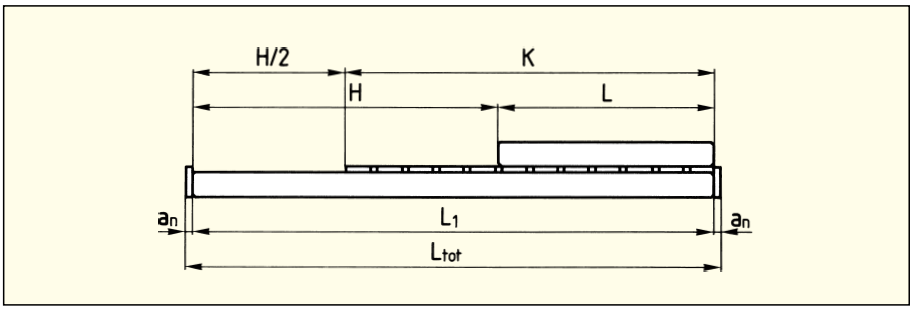

Maximum permissible fitting relationship $L : L_1$
– For preloaded guideways 1 : 2
– For gravity loaded guideways 1 : 4

On various linear bearings endpieces with wipers can be used. Two fitting options are feasible. In both cases the following length relationship results:

1st Option: Anti-friction guideways with wipers and equal length linear bearings
$K = L - H/2 - a_n$
$L_{tot} = L + H/2 + a_n$

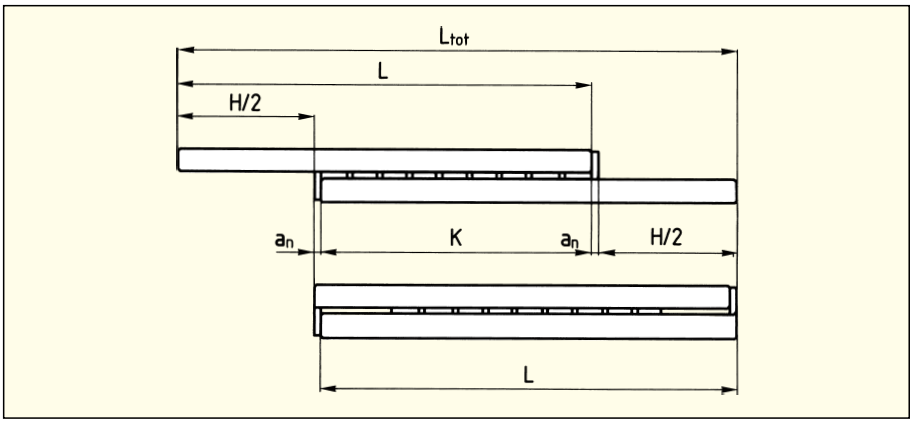

With this design the linear bearings must be fitted offset by the amount a_n.

2nd Option: Anti-friction guideways with wipers and unequal length linear bearings
$K = L - H/2$
$L_{tot} = L_1 + H/2$
(when long guideway moves)
$L_{tot} = L_1$ (when short guideway moves)

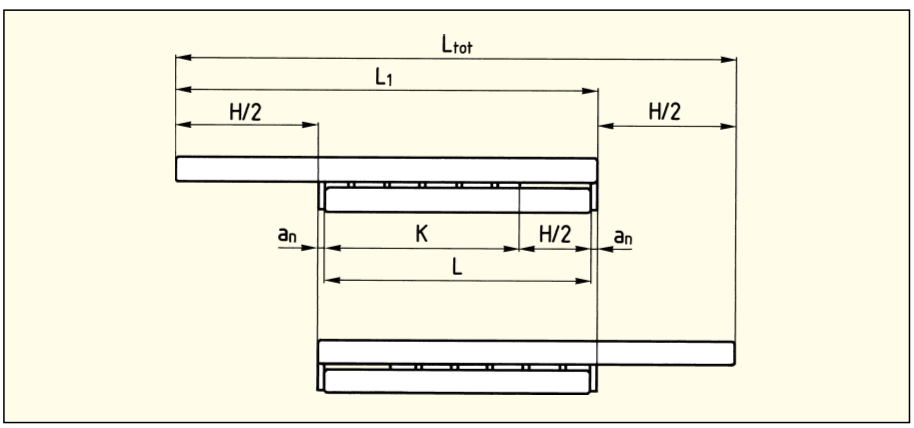

Basically, the stroke should be limited by means of stops on the table and not by the cages. The stops should preferably be fitted on the symmetrical axis of the guideway in order to prevent additional forces acting on the linear bearing.

Recirculating Units

When recirculating units are used, there are no limitations in travel as, for long strokes, linear bearings can be ground together (chapter 15.1).

With regard to spacing K of the recirculating unit to the linear bearing spacing Q, the following relationship is recommended:

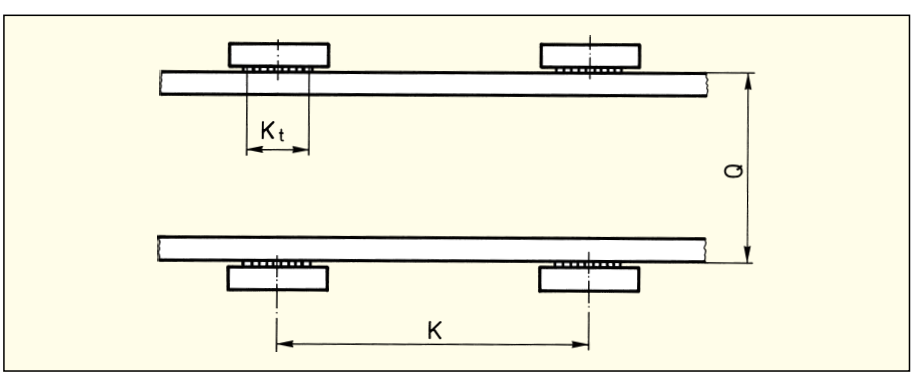

– When more than 2 recirculating units are used: Middle/middle of recirculating units K to guideway spacing Q

$$\frac{K}{Q} \geqslant 1$$

– When a total of 2 recirculating units are used: Load carrying length K_t to guideway spacing Q

$$\frac{K_T}{Q} \geqslant 1$$

Basically the stroke should be limited by means of stops on the table. It is advantageous to place the drive and the stops in the symmetrical axis of the guideway to prevent additional forces acting on the recirculating units.

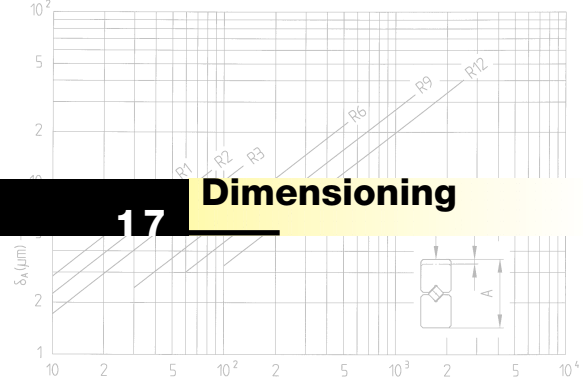

17 Dimensioning

SCHNEEBERGER
LINEAR TECHNOLOGY

17.1 Load Carrying Capacity and Operational Life

In dimensioning anti-friction guideways, the loads encountered in relationship to the load carrying capacity are decisive. The length must be adapted to the stroke and in addition the elastic deformation, or the rigidity, must be noted.
The load carrying capacities of the individual anti-friction guideways are based on the fundamentals established by ISO for the calculation of roller bearings (ISO standard 281). The load carrying capacity C is the load with which a nominal operational life of 100 000 m travel results, given that the size and direction of the load remain unchanged and the line of application is vertical onto the rolling element.
The latest research results have shown that the static load should not be greater than the dynamic load. The reason for this lies in the fatigue behavior which is always initiated at the highest loaded point. In the case of an absolutely constant load during standstill and in operation, the fatigue process will start at that point where the static load is present longest.
The C-values given are to be used in the operational life equation to calculate the permissible load, or the operational life resulting with a given load.
The operational life is the travel in meters which is made by a linear bearing before the first signs of material fatigue on any of the components appear. The nominal operational life is achieved when 90% of a large number of the same type of linear bearings achieve or exceed the prescribed amount of travel.
As previously mentioned, the load carrying capacity value C is based on an operational life of 100 000 m. Some manufacturers use, for various reasons, a larger load carrying capacity with 50 000 m operational life. The C_{50} values for SCHNEEBERGER anti-friction guideways are calculated as follows:
$C_{50} = C \cdot 1{,}23$ for rollers and needles
$C_{50} = C \cdot 1{,}26$ for balls

The operational life L, the load carrying capacity C (N) and the loading P (N) have the following relationship:

$$L = a \left(\frac{C_{eff}}{P}\right)^{10/3} \cdot 10^5 \text{ m for rollers and needles}$$

$$L = a \left(\frac{C_{eff}}{P}\right)^{3} \cdot 10^5 \text{ m for balls}$$

whereby a is the probable life expectancy factor. The operational life in hours can be calculated when the single stroke H (m) and the time needed for it t (s) are known:

$$L_h = \frac{L \cdot t}{H \cdot 3600} \text{ in h}$$

Life Expectancy
According to the ISO standard the load carrying capacities for roller bearings are given in such a manner that from the operational life equation a value results which, with 90% probability, will be exceeded. Should this probability not suffice, then the operational life must be shortened with a factor as in the following table:

Life Expectancy %	90	95	96	97	98	99
a	1	0.62	0.53	0.44	0.33	0.21

Load Carrying Capacity
One can only speak of a permissible load, or load carrying capacity, for anti-friction guideways when it is mentioned together with the operational life desired. As can be seen from the previous calculation, the value L = 100 000 m is used as the standard operational life.

Other influences can reduce the load carrying capacity C so that a C_{eff} has to be calculated.

$$C_{eff} = f_H \cdot f_T \cdot C$$

Running Surface Hardness
Anti-friction guideways using materials hardened to less than 58 HRC have a reduced load carrying capacity as determined by factor f_H:

Running Surface Hardness (HRC)	20	30	40	50	55	56	57	58
Hardness Factor f_H	0.1	0.2	0.3	0.6	0.8	0.88	0.95	1

The reduced load carrying capacity is given by: $C_{fH} = f_H \cdot C$

Temperature
Increased temperatures can influence the operating characteristics negatively (lubrication, material properties) and have to be taken into consideration with factor f_T :

Temperature of Guide (° C)	150	200	250	300
Temperature Factor f_T	1.0	0.9	0.75	0.6

The reduced load carrying capacity is given by: $C_{fT} = f_T \cdot C$
Note the limitations in chapter 15.3

Dynamic Equivalent Loading
With stepped changes in load for rollers and needles

$$P = \sqrt[10/3]{\frac{1}{L}\left(F_1^{10/3} \cdot L_1 + F_2^{10/3} \cdot L_2 + \ldots + F_n^{10/3} \cdot L_n\right)}$$

With stepped changes in load for balls

$$P = \sqrt[3]{\frac{1}{L}\left(F_1^{3} \cdot L_1 + F_2^{3} \cdot L_2 + \ldots + F_n^{3} \cdot L_n\right)}$$

With sinusoidal loading for rollers, needles and balls

$P = 0.7\ F_{max}$

$F_1 \ldots F_n$	Single load during partial stroke $L_1 \ldots L_n$ in N
$L_1 \ldots L_n$	Partial stroke of a single load during one load cycle in mm
$L = L_1 + \ldots + L_n$	Total stroke during one load cycle in mm
P	Equivalent load in N
F_{max}	Single load in N

17.2 Elastic Deformation and Rigidity

The total deformation δ_A – that is the deformation of the rolling elements in connection with hard guideways (min. 58 HRC) – can be read from the following diagrams: The deformation of the pre-loaded assembly can be determined from the same diagrams.

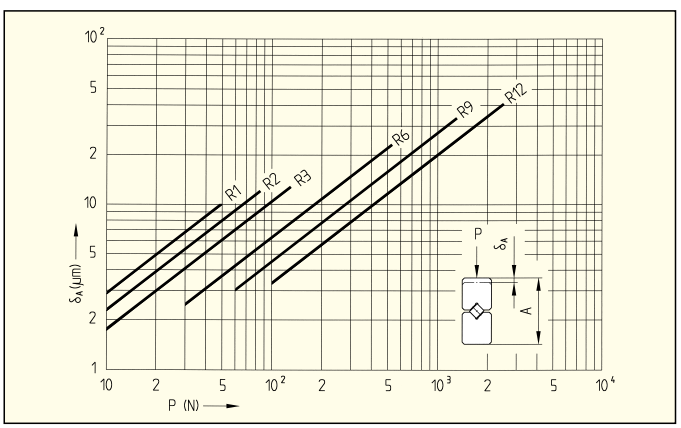

Diagram 1:
Elastic deformation of type R linear bearings with reference to P per roller

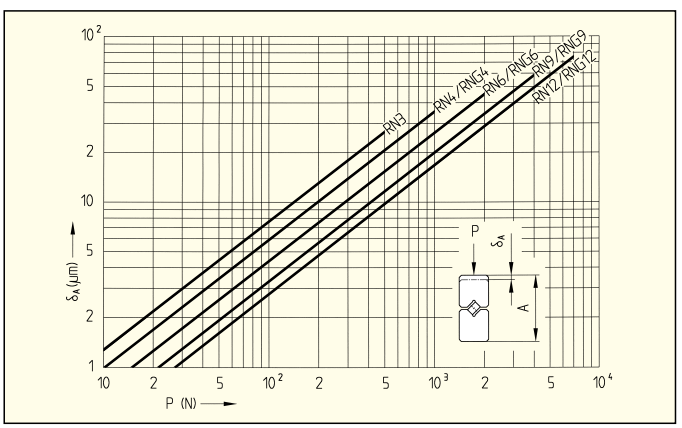

Diagram 2:
Elastic deformation of type RNG linear bearings with reference to P per roller

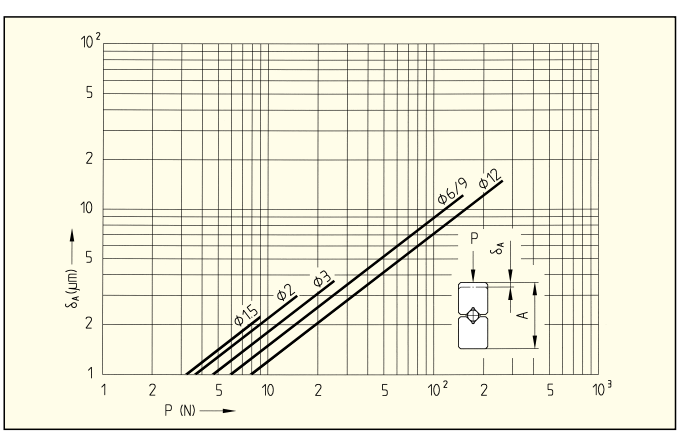

Diagram 3:
Elastic deformation of type R linear bearings with reference to P per ball

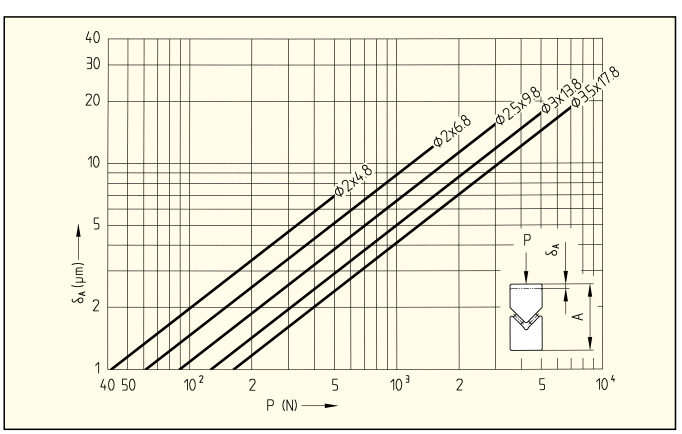

Diagram 4:
Elastic deformation of type N/O linear bearings with reference to P for N/O per pair of needles

The deformation of pre-loaded assemblies can be determined from the same diagrams.
When calculating cross-roller linear bearings it should be noted that as opposed to needles and balls only every second roller can accept loading.

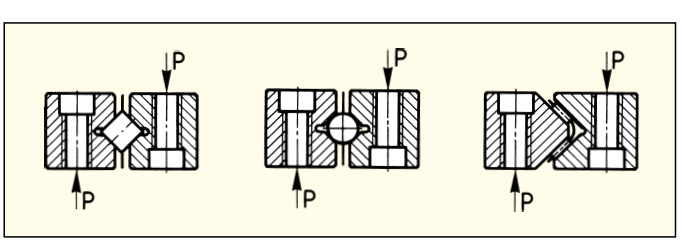

Recirculating Units

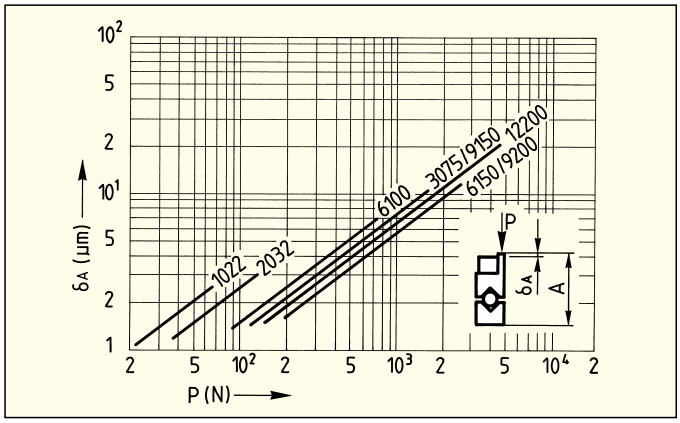

Diagram 1: Elastic deformation of type SK recirculating units used with type R or RD linear bearings

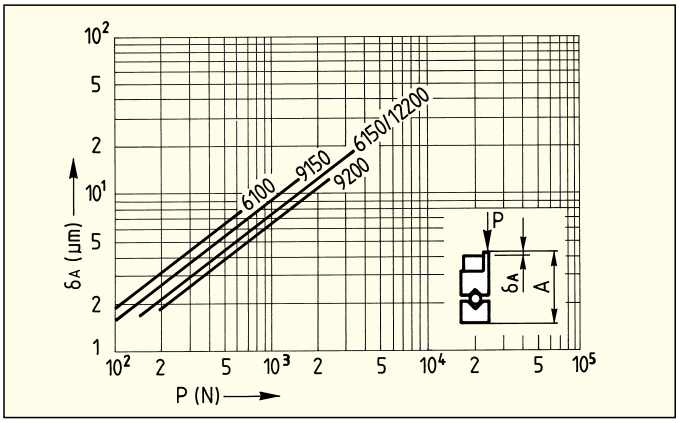

Diagram 2: Elastic deformation of type SKD recirculating units used with type R or RD linear bearings

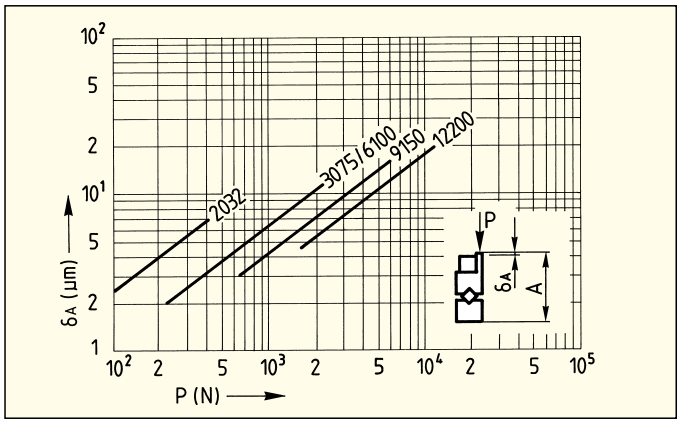

Diagram 3: Elastic deformation of type SR recirculating units used with type R or RD linear bearings

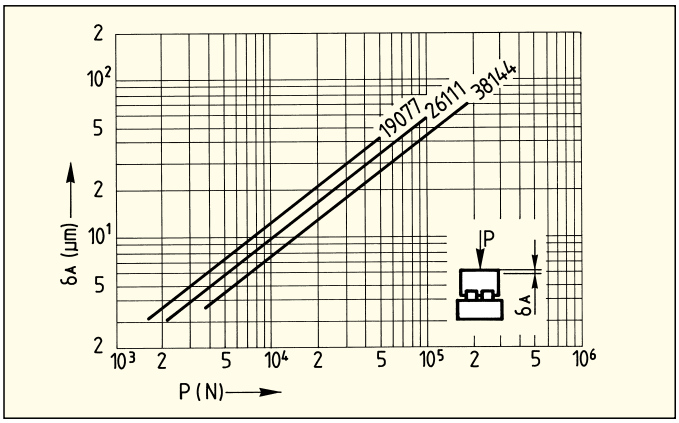

Diagram 4: Elastic deformation of type NRT recirculating units used with hardened guideways

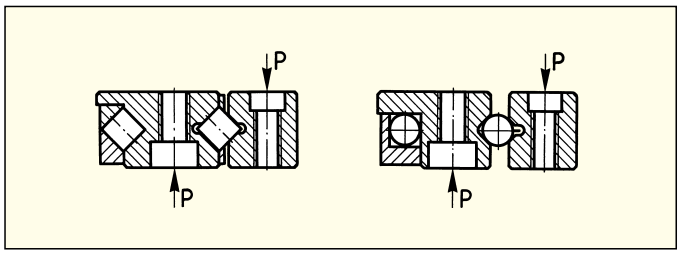

The deformation of preloaded assemblies can be determined from the same diagrams.
When calculating crossroller linear bearings it should be noted that as opposed to needles and balls only every second roller can accept loading.

17.3 The Essentials Summarized

Linear Bearings

Dimensioning

Relationship of stroke to length of linear bearing

$\frac{H}{L} \leqslant 0.7$ ($H \leqslant 400$ mm) $\qquad \frac{H}{L} \leqslant 1$ ($H > 400$ mm)

Cage length

$K \leqslant L - \frac{H}{2}$

Number of rolling elements per cage KBN, AC, AK, EE, SHW, HW

$R_A = \frac{K - 2w}{t} + 1$ or $R_A = \frac{K_t}{t} + 1$

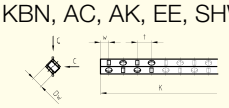

Number of rolling elements per cage KBS

$R_A = \frac{K - (2w + t_z)}{t} + 2$

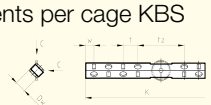

Cage length to linear bearing spacing; CL to CL

$\frac{K}{Q} \geqslant 1$

K = Cage length in mm
L = Length of linear bearing in mm
H = Stroke in mm
R_A = Total number of rolling elements per cage
w = Distance start of cage to middle of first rolling element in mm
t = Cage pitch in mm
K_t = Load carrying length in mm
Q = Linear bearing spacing; CL to CL in mm
R_T = Number of load carrying rolling elements per cage
R_{Tmin} = Correction factor dependent on rolling element
δ_A = Deformation in µm

Operational Life

Operational life of rollers and needles $\qquad L = a \left(\frac{C_{eff}}{P}\right)^{10/3} \cdot 10^5$

Operational life of balls $\qquad L = a \left(\frac{C_{eff}}{P}\right)^{3} \cdot 10^5$

Effective load carrying capacity $\qquad C_{eff} = f_H \cdot f_T \cdot C$

L = Nominal operational life in m
C = Max. permissible load carrying capacity per rolling element in N
C_{eff} = Effective load carrying capacity per rolling element in N
a = Probable life expectancy factor
P = Equivalent load in N
f_H= Hardness factor
f_T= Temperature factor

Recirculating Units

Dimensioning

Relationship of spacing K or K_t to average linear bearing spacing

$$\frac{K}{Q} \geqslant 1 \text{ or } \frac{K_t}{Q} \geqslant 1$$

H = Stroke in mm
K_t = Load carrying length in mm
L = Length of recirculating unit in mm
M_L = Permissible moment loading in Nm lengthwise and sidewise
M_Q = Permissible moment loading in Nm crosswise
K = Distance middle/middle of outermost recirculating units in mm
Q = Linear bearing spacing; CL to CL in mm
R_T = No. of load carrying recirculating units on one guideway side
R_{Tmin} = Correction factor dependent on rolling element

Operational life

Operational life of rollers $L = a \left(\frac{C_{eff}}{P}\right)^{10/3} \cdot 10^5$

Operational life of balls $L = a \left(\frac{C_{eff}}{P}\right)^{3} \cdot 10^5$

Effective load carrying capacity $C_{eff} = f_H \cdot f_T \cdot C$

L = Nominal operational life in m
C = Max. permissible load carrying capacity per recirculating unit in N
C_{eff} = Effective load carrying capacity per recirculating unit in N
a = Probable life expectancy factor
P = Equivalent load in N
f_H = Hardness factor
f_T = Temperature factor
δ_A = Deformation in µm

18.1 Load carrying capacity and operational life

In the previous sections it was explained how, from the given load carrying capacity and the loads occurring, the operational life can be calculated. The crucial significance of a realistic calculation of the forces occurring is obvious. It is equally important to estimate the behavior of the base construction when the forces are transmitted to the anti-friction guideway. Elastic deformation of a machine bed leads, for example, to the fact that only a few of the rolling elements fitted actually can accept loading. Geometric errors have the same effect.
Reliable propositions on this application-specific problem can usually only be compiled with great effort either with measurements on functional models or with calculations using the finite element method. The result is that normal dimensioning is made using simplified measures i.e. the external load is distributed over only a few rollers by means of the correction factor R_{Tmin}.
The load carrying capacities C/Roller in this catalog are empirically determined and do not correspond to DIN-calculated figures.

Correction Factor R_{Tmin}
To determine R_{Tmin} the base construction must first be assessed using the following empirical figures:

A: Extra rigid construction $\delta_S \leqslant 0.1 \cdot \delta_A$
B: Rigid construction $\delta_S > \delta_A$

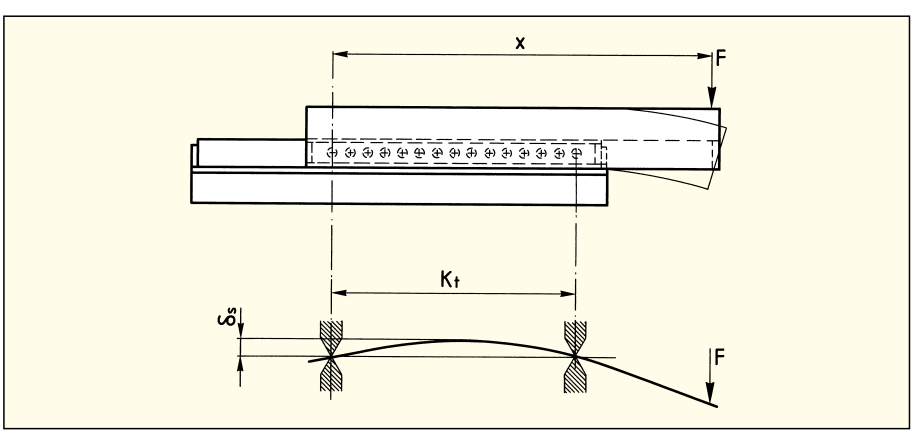

F: Load in N
x: Spacing in mm
K_t: Load carrying cage length in mm
δ_S: Deformation of base construction in µm
δ_A: Deformation of rolling elements and linear bearings (Diagram chapter 17.2) in µm

From the following diagram the values for R_{Tmin} are:

Construction	A (Extra rigid)	B (Rigid)
$X > K_t$	R_{Tmin} to $R_T/4$	R_{Tmin}
$X < K_t$	Per Diagram	Per Diagram

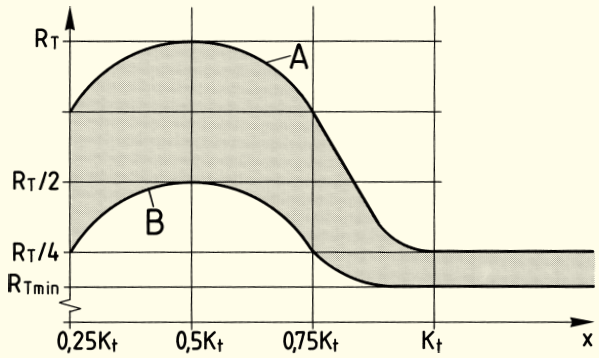

R_{Tmin}	Rolling Element	Type of Cage
2	Balls	AK
1	Cross rollers	AC, EE, KBN, KBS
5	Needles	SHW, HW
0.5	For Recirculating Units with Rollers	
1	For Recirculating Units with Balls	

The effect of preload must be taken into consideration as follows: External loads which load the individual rolling elements more heavily then the preload: no influence. With the intermittent absence of the external load or if the preload should exceed the external load, then the preload is contributory to, or determines, the operational life.

Exception: When only 2 recirculating units are used per guide then the moments indicated in the tables (M_L, M_Q) may not be exceeded.

The following calculation examples illustrate the procedure with a few typical problems.

1st Example

Given: Linear bearings type R 6

R_A = 8 rollers

F = 350 N

x = 120 mm

a) Roller cage type AC 6

$K_t = (R_A - 1) \cdot t$

$R_{Tmin} = 1$

C = 530 N

b) Ball cage type AK 6

$K_t = (R_A - 1) \cdot t$

$R_{Tmin} = 2$

C = 65 N

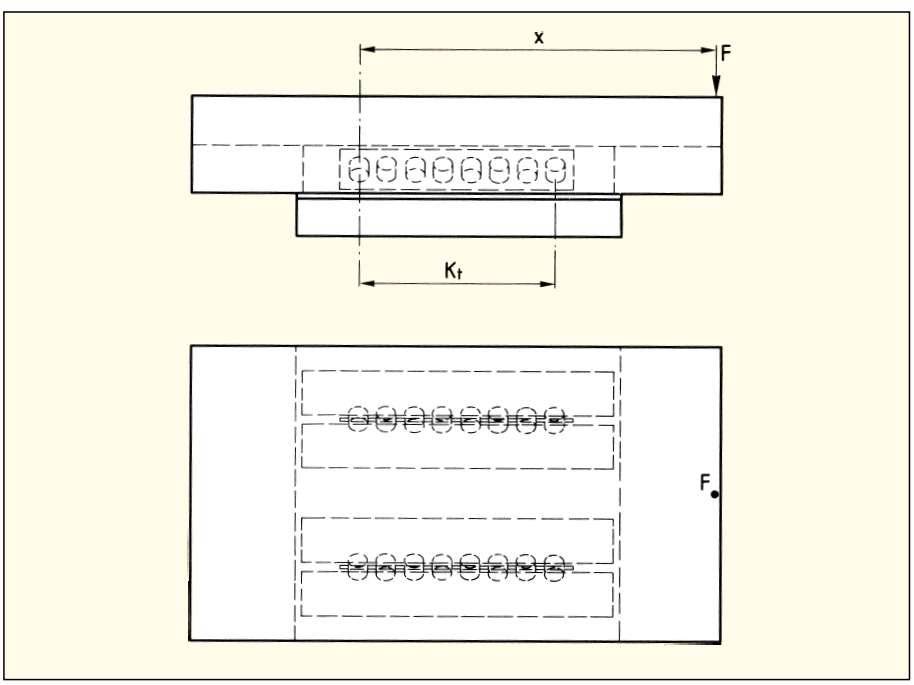

The asymmetrical distribution of force is most reliably taken into consideration when the load is reduced on the number of loaded rolling elements (R_{Tmin}) in the guide.

Control calculation:

For rollers $P = \frac{F \cdot x}{K_t \cdot 2} \cdot \frac{1}{R_{Tmin}} = \frac{350 \cdot 120}{63 \cdot 2} \cdot \frac{1}{1} = 334$ N

For balls $P = \frac{F \cdot x}{K_t \cdot 2} \cdot \frac{1}{R_{Tmin}} = \frac{350 \cdot 120}{63 \cdot 2} \cdot \frac{1}{2} = 167$ N*

*Possibly new control calculation with modified design

2nd Example

Given:
Linear bearings type R 6
Roller cages type AC 6
R_A = 20 rollers

$$R_T = \frac{R_A}{2} = \frac{20}{2} = 10 \text{ rollers}$$

K = $(R_A - 1) \cdot t + 2w = (20 - 1) \cdot 9 + 12 = 183$ mm
F = 6500 N
C = 530 N

Control calculation: $P \frac{F}{2} \cdot \frac{1}{R_T} = \frac{6500}{2} \cdot \frac{1}{10} = 325$ N

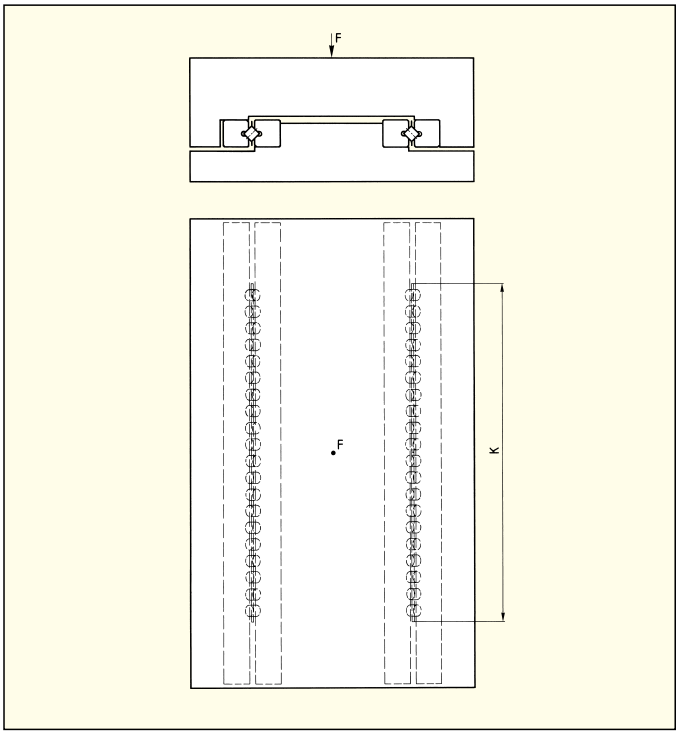

3rd Example

Given:
Rigid table construction
Linear bearings type R 6
Ball cage type AK 6
R_A = R_T = 12 balls
R_{Tmin} = 3 $\triangleq R_T/4$ (see diagram, chapter 18.1)
K_t = $(R_A - 1) \cdot t$
F = 240 N
x = 75 mm (distance F to counter force)
C = 65 N

Control calculation: $P \frac{F \cdot x}{K_t \cdot 2} \cdot \frac{1}{R_{Tmin}} = \frac{240 \cdot 75}{99 \cdot 2} \cdot \frac{1}{3} = 30$ N

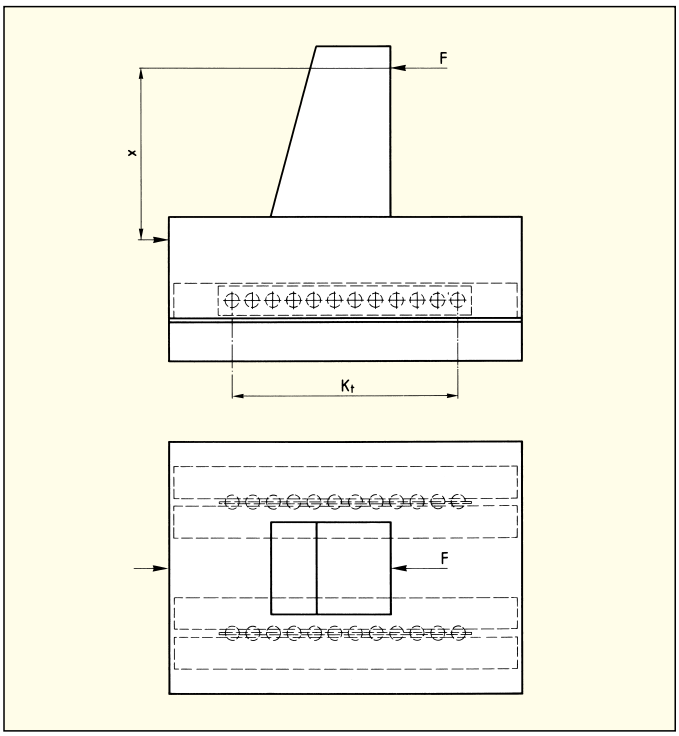

4th Example

Given:
Linear bearings type RNG
Roller cage type KBN
R_A = 10 rollers

$$R_T = \frac{R_A}{2} \cdot \frac{10}{2} = 5 \text{ rollers}$$

F = 15 000 N
x = 50 mm
Q = 100 mm

Calculation:

$$P_1 = \frac{F \cdot x}{Q} \cdot \frac{1}{R_T} = \frac{15\,000 \cdot 50}{100} \cdot \frac{1}{5} = 1500 \text{ N}$$

$$P_2 = \frac{F}{R_A} = \frac{15\,000}{10} = 1500 \text{ N}$$

$P = P_1 + P_2 = 1500 + 1500 = 3000$ N*

*According to the tables in chapter 7.1, the next loading limit is C = 3900 N, corresponding to Size 9

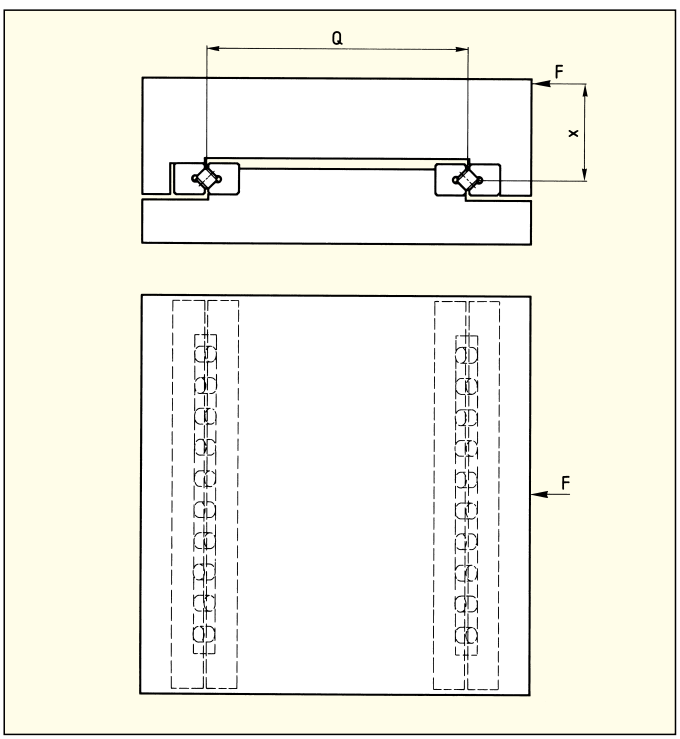

5th Example

Given:
Linear bearings type N/O 2025
Needle cage type SHW 15
K = 194 mm

$$R_A = R_T = \frac{K - 2w}{t} + 1$$

$$= \frac{194 - 6}{4} + 1 = 48 \text{ needles}$$

F = 5000 N
x = 280 mm
Q = 75 mm
C = 750 N

Control calculation: $P \frac{F \cdot x}{Q} \cdot \frac{1}{R_T} = \frac{5000 \cdot 280}{75} \cdot \frac{1}{48} = 389$ N

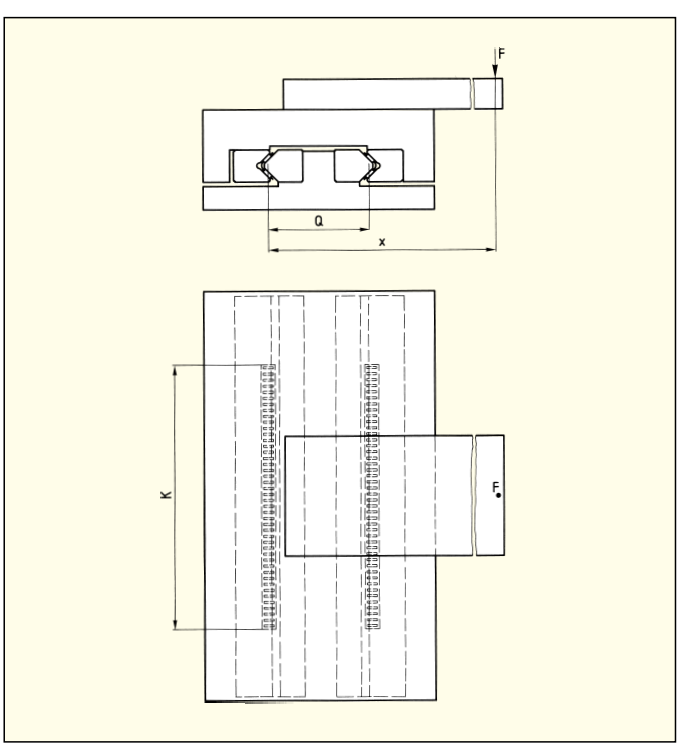

6th Example

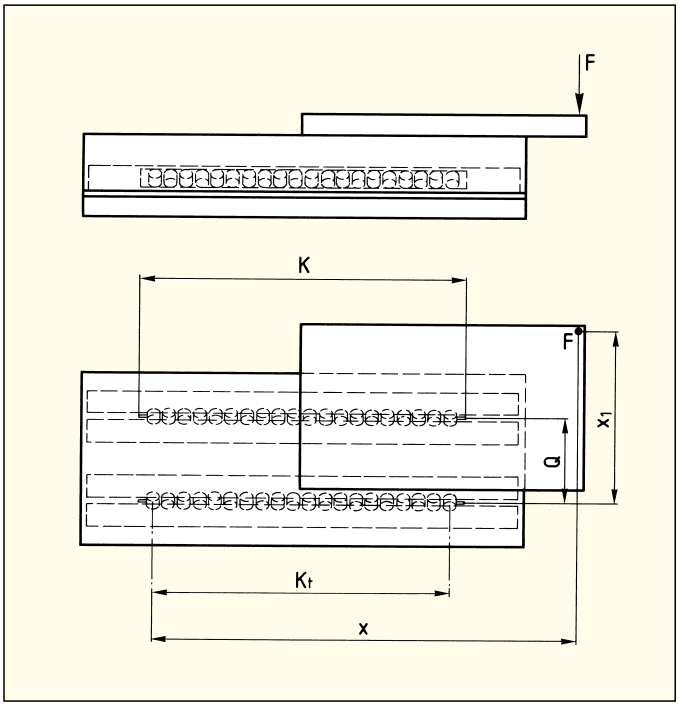

Given:
Rigid construction
Linear bearings type R 12
Roller cage type AC 12

$K = 400$ mm

$K_t = K - 2w = 400 - 22 = 378$ mm

$$R_A = \frac{K_t}{t} + 1 = \frac{378}{18} + = 22 \text{ rollers}$$

$$R_T = \frac{R_A}{2} = \frac{22}{2} = 11 \text{ rollers}$$

$x > K_t = R_T/4$ (see diagram, chapter 18.1)

$R_{T_{Q(Cross)}} = R_T$

$$R_{T_{L(Lengthwise)}} = \frac{R_T}{4} = \frac{11}{4} = 2{,}75 \text{ rollers (rounded-off to 2)}$$

$F = 2000$ N
$x = 500$ mm
$x_1 = 200$ mm
$Q = 100$ mm
$C = 2500$ N

Control calculation:
Crosswise loading

$$P_Q = \frac{F \cdot x_1}{Q} \cdot \frac{1}{R_{T_Q}} = \frac{2000 \cdot 200}{100} \cdot \frac{1}{11} = 364 \text{ N}$$

Lengthwise loading

$$P_L = \frac{F \cdot x}{K_t \cdot 2} \cdot \frac{1}{R_{T_L}} = \frac{2000 \cdot 500}{378 \cdot 2} \cdot \frac{1}{2} = 662 \text{ N}$$

$P = P_Q + P_L = 364 + 662 = 1026$ N*

* For design reasons size 12 is selected. From the loading point-of-view the next smaller guideway cross section would suffice. Possibly check design.

7th Example

Given:
Recirculating units type SR 6-100
Linear bearings type R 6
R_T = 2 Recirculating units
F = 6000 N
C = 2150 N

Control calculation:

$$P = \frac{F}{2} \cdot \frac{1}{R_T} = \frac{6000}{2} \cdot \frac{1}{2} = 1500 \text{ N}$$

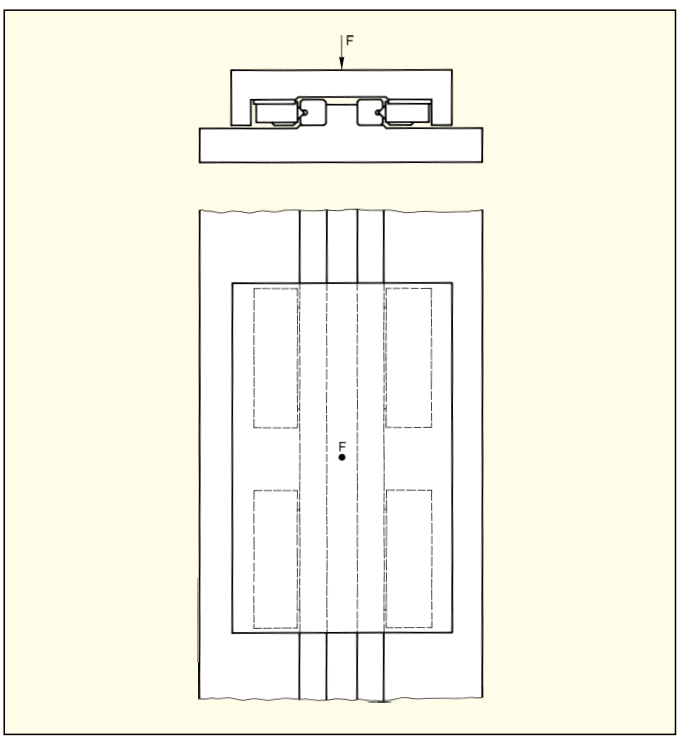

8th Example

Given:
Recirculating units type SR 6-150
Linear bearing type RD 6
M_L = 112 Nm
x = 45 mm (Distance F to counter force)
F = 2000 N

Control calculation:

$M = F \cdot x = 2000 \cdot 0.045 = 90$ Nm

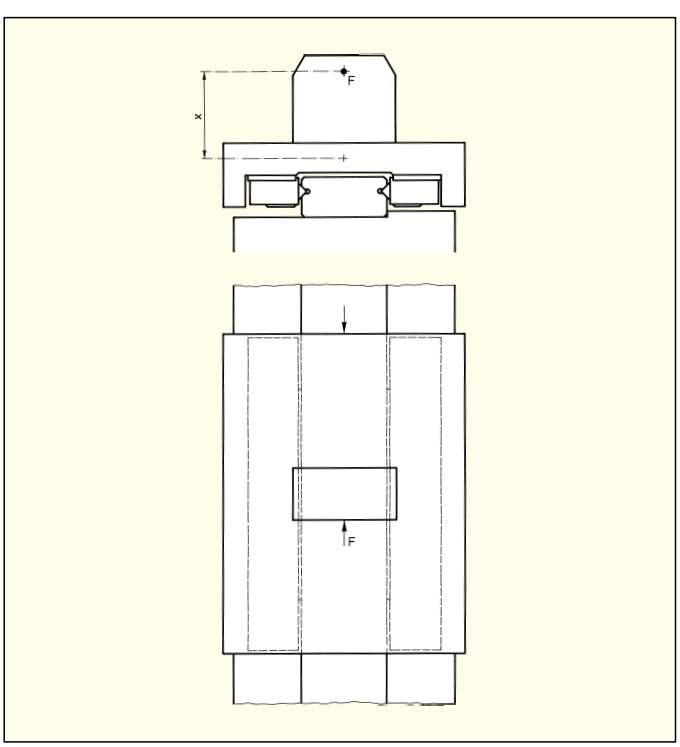

9th Example

Given:
Recirculating units top type NRT 26 111, C = 98 000 N
Recirculating units bottom type NRT Special, C = 61 000 N
Recirculating units lateral type NRT 19 077, C = 43 000 N
Special linear bearings

$K = 700$ mm
$K_1 = 450$ mm
$R_{Tmin} = 0.5$
$F = 83\,000$ N
$x = 500$ mm
$y = 100$ mm

Control calculation:
Lengthwise loading

$$P_L = \frac{F \cdot x}{K \cdot 2} \cdot \frac{1}{R_{Tmin}} = \frac{83\,000 \cdot 500}{700 \cdot 2} \cdot \frac{1}{0.5} = 59\,286 \text{ N}$$

Crosswise loading

$$P_Q = \frac{F \cdot y}{K_1} \cdot \frac{1}{R_{Tmin}} = \frac{83\,000 \cdot 100}{450} \cdot \frac{1}{0.5} = 36\,889 \text{ N}$$

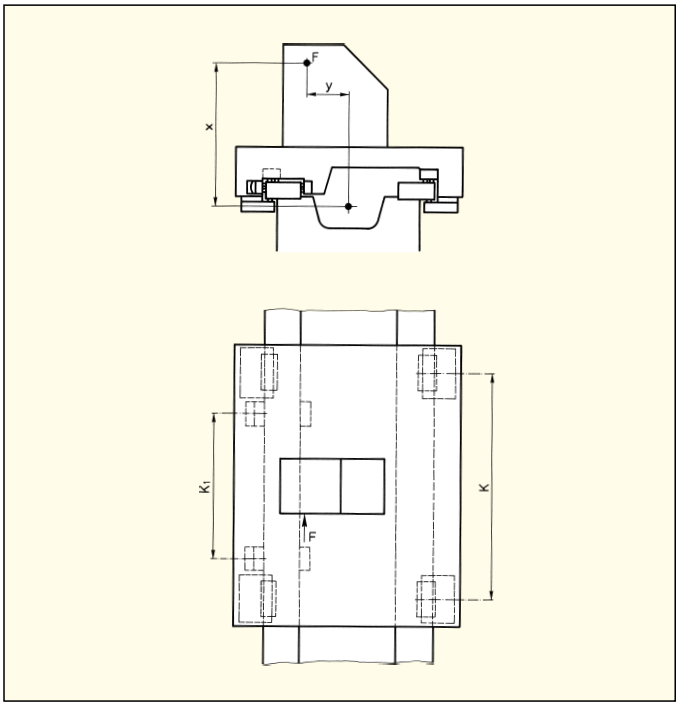

Product Denotations

Type	Accessories	Chapter
RN	Cages: KBN Endpieces: GAN, GA Special Attaching Screws: GD	3
RNG	Cages: KBN Endpieces: GBN, GCN, GCN-A Special Attaching Screws: GDN	4
R	Cages: AC, AK, EE Endpieces: GA, GB, GC, GC-A Special Attaching Screws: GD Recirculating Units: SK, SKC, SKD, SR	5
RD	Cages: AC, AK Recirculating Units: SK, SKC, SKD, SR	6
N and O	Cages: SHW, HW Endpieces: GFN, GFO, GH, GH-A, GW, GW-A Special Attaching Screws: GD	8
M and V	Cages: SHW, HW Endpieces: EM/EV, EAM, EAV	9
SK/SKD	–	11
SKC	–	12
SR	–	13
NRT	Connection to Central Lube System Preload Wedges: NRV	14

In order to process an order correctly we require the following data:
- Quantity
- Order No.
- Type of cage, length or number of rolling elements
- Endscrews or endpieces

Every non-standard component must be specially quoted.

Linear Bearings

Deviations from the standard Model	Suffix (quote when ordering)
Special Quality	– SQ e.g. N 2535 800–SQ
Corrosion resistant Model (Only Type R 1–R 12)	– RF e.g. R 3 200–RF
Entries rounded for Protruding Cages	– EG e.g. RNG 9 200–EG
For Roller Cages Type EE (Dim. J toleranced)	– EE e.g. R 6 300–EE
Linear Bearings ground together when L is greater than standard Length	– ZG, ground together to … e.g. RD 6 1000–ZG, ground together to 3000 mm Length
Height matched Linear Bearing with gravity loaded Fitting	– HA, Height matched e.g. R 9600–HA
Chrome coating type Duralloy ®	– DU e.g. R 9–600–DU
Integrated cage assist	– KS e.g. RN 6–600–KS

Recirculating units
Matched sets (chapter 15.1), Suffix **matched** (GP), e.g. 12 Recirculating units SR 9-150, matched in sets of 3

Ordering example for 1 complete anti-friction guideway RNG 9 with protruding cage, 500 mm long base section and 200 mm stroke.

The following ordering data result:
2 Linear bearings RNG 9-500
2 Linear bearings RNG 9-300 – EG
2 Roller cages KBN 9 × 33 rollers*
4 Endpieces GCN 9

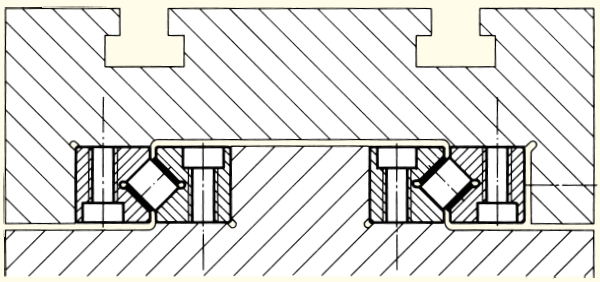

Ordering example for 1 complete anti-friction guideway R 9-700 with rollers, stroke 400 mm, horizontal fitting.

The following ordering data result:
4 Linear bearings R 9-700
2 Roller cages AC 9 × 35 rollers*
8 Endscrews GA 9

* The cage length K is calculated from 2 · dimension w (start and end) and Number of divisions · Pitch t
Condition:
$K \leqslant L - H/2$ (see also chapter 17.7)

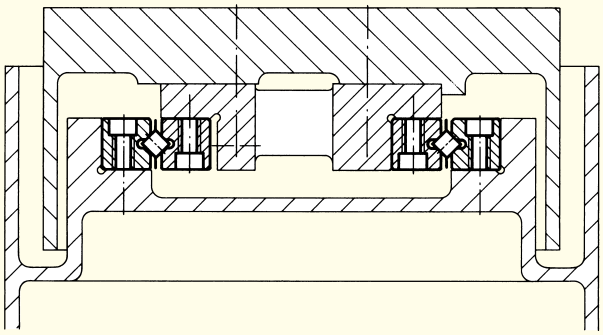

Ordering example for a complete anti-friction guideway with recirculating units type SK, linear bearing type RD and sliding top section 410 mm long.

The following ordering data result:
4 Recirculating units SK 9-150, matched in sets of 2
1 Linear bearing RD 9-1000

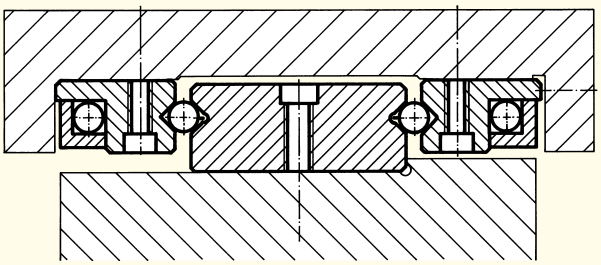

Special Linear Bearings and Recirculating Units

Our comprehensive standard range can be complemented with specially manufactured models, so that every wish can be realized with the best possible technical solution. We are in a position to provide complete solutions to specific problems in accordance with the demands placed. Please consult our specialists.

SWITZERLAND

W. Schneeberger AG
CH-4914 Roggwil/BE
Phone 062 918 41 11
Fax 062 918 41 00

E-Mail:
info-ch@schneeberger.com
www.schneeberger.com

GERMANY

Schneeberger GmbH
75339 Höfen/Enz
Phone 07081 782-0
Fax 07081 782-124

E-Mail:
info-d@schneeberger.com

ITALY

Schneeberger S.p.A
21021 Angera VA
Phone 0331 93 20 10
Fax 0331 93 16 55

E-Mail:
info-i@schneeberger.com

FRANCE

Schneeberger
Technique Linéaire SARL
91222 Brétigny-sur-Orge
Phone 01 69 88 50 00
Fax 01 60 84 96 02

E-Mail:
info-f@schneeberger.com

USA

Schneeberger Inc.
Bedford, MA 01730
Phone +1 781-271-0140
+1 800-854-6333
Fax +1 781-275-4749

E-Mail:
info-usa@schneeberger.com

SCHNEEBERGER
LINEAR TECHNOLOGY

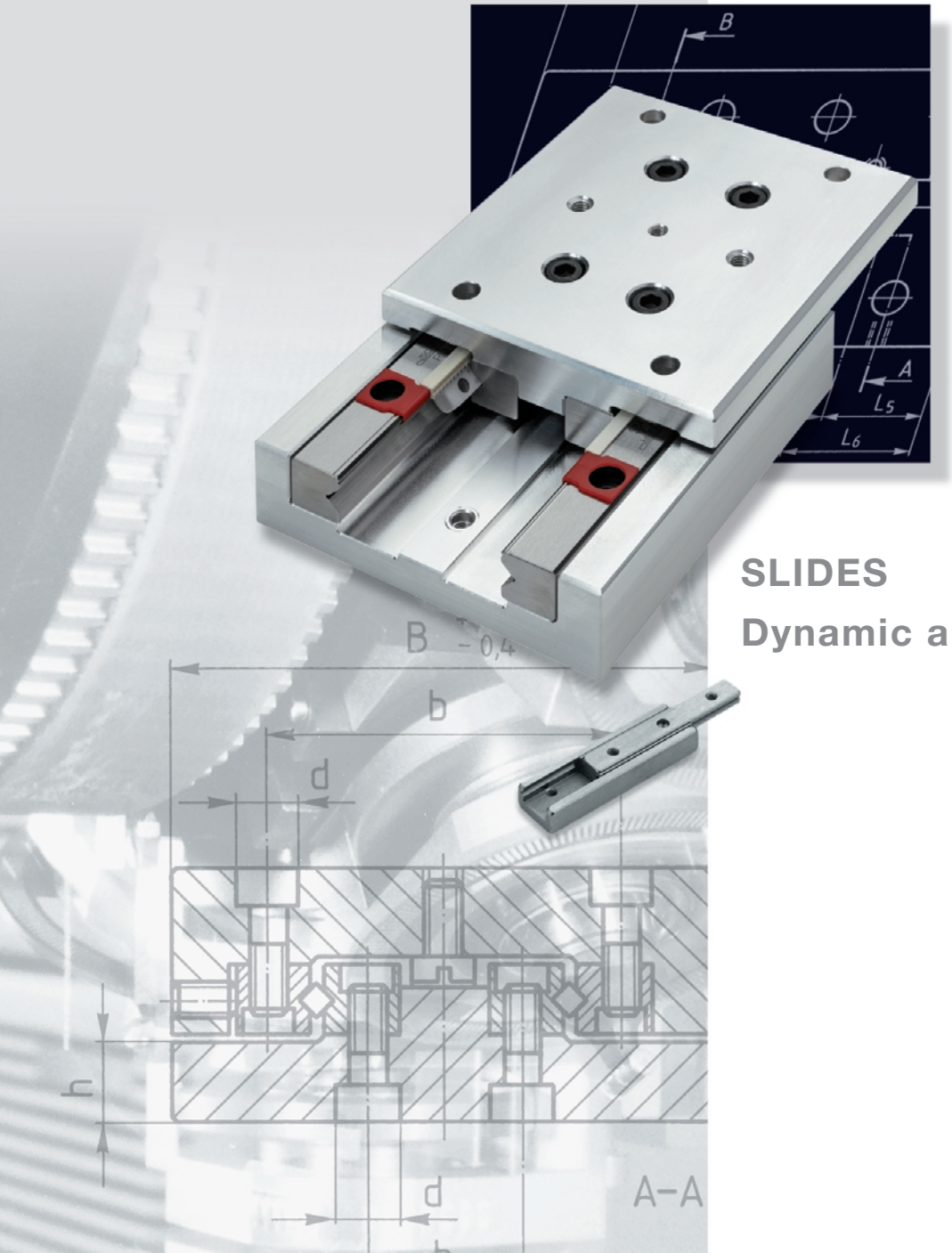

SLIDES

Dynamic and Precise

SCHNEEBERGER
LINEAR TECHNOLOGY

Table of Contents

1 Product Overview . . . . . S ● 4

2 Applications
2.1 Die Attach System with ND 1 . . . . . S ● 6
2.2 Multimode Fusion Splicer with NK 1 Tables . . . . . S ● 7
2.3 Printed Circuit Board Assembly with NDN 1 . . . . . S ● 8
2.4 Laser Measuring Device with ND 1 . . . . . S ● 9

3 Frictionless Tables Type NK
3.1 Frictionless Tables Type NK . . . . . S ● 11
3.2 Material . . . . . S ● 11
3.3 Standard Model . . . . . S ● 11
3.4 Special Models . . . . . S ● 11
3.5 Specifications . . . . . S ● 12
3.6 Accessories . . . . . S ● 16

4 Frictionless Tables Type NKL
4.1 Frictionless Tables Type NKL . . . . . S ● 17
4.2 Material . . . . . S ● 17
4.3 Standard Model . . . . . S ● 17
4.4 Special Model . . . . . S ● 17
4.5 Specifications . . . . . S ● 18

5 Micro Frictionless Tables Type ND
5.1 Micro Frictionless Tables Type ND . . . . . S ● 23
5.2 Material . . . . . S ● 23
5.3 Standard Model . . . . . S ● 23
5.4 Special Model . . . . . S ● 23
5.5 Specifications . . . . . S ● 24

6 Micro Frictionless Tables Type NDN
6.1 Micro Frictionless Tables Type NDN . . . . . S ● 27
6.2 Material . . . . . S ● 27
6.3 Standard Model . . . . . S ● 27
6.4 Specifications . . . . . S ● 28

7 Technical Information
7.1 Acceptance Tolerances . . . . . S ● 30
7.2 Accuracy . . . . . S ● 30
7.3 Materials . . . . . S ● 32
7.4 Permissible Operating Temperatures . . . . . S ● 32
7.5 Lubrication . . . . . S ● 32
7.6 Permissible Velocities and Accelerations . . . . . S ● 32
7.7 Friction, Running Accuracy and Smoothness . . . . . S ● 32

8 Design and Fitting Guidelines
8.1 Horizontal and Vertical Fitting . . . . . S ● 33
8.2 Attaching Frictionless Tables . . . . . S ● 33
8.3 Preloading Frictionless Tables . . . . . S ● 33
8.4 Design of Base Unit . . . . . S ● 33
8.5 Accessories for Frictionless Tables . . . . . S ● 33

9 Dimensioning Frictionless Tables
9.1 Load Carrying Capacity and Operational Life . . . . . S ● 34
9.2 Moment Loading . . . . . S ● 35

Frictionless Tables Type NK

- Single axis model in steel or cast-iron depending on the size
- With roller cages
- 5 sizes
- Lengths from 25 to 510 mm
- Strokes from 10 to 450 mm
- Supports a variety of applications due to the many different sizes
- For highest accuracy requirements
- For highest accelerations available with FORMULA-S

Frictionless Tables Type NKL

- Single axis model
- Light design, table components in aluminum
- 4 sizes
- With roller cages
- Lengths from 25 to 410 mm
- Strokes from 10 to 280 mm
- For highest accelerations available with FORMULA-S

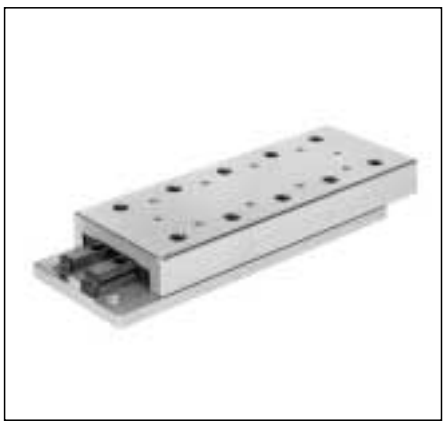

Micro Frictionless Tables Type ND

- Single axis model in steel
- 3 sizes
- With roller cages
- Lengths from 25 to 155 mm
- Strokes from 12 to 90 mm
- Low friction force
- For highest accuracy requirements

Micro Frictionless Tables Type NDN

- Single axis model in corrosion resistant steel
- 3 sizes
- With ball cage in brass
- Cage centering mechanism which helps to avoid cage creep
- Length from 10 to 80 mm
- Strokes from 5 to 70 mm
- For highest accuracy requirements
- Suitable for high speed applications

2 Applications

2.1 Die Attach System with ND 1

One of the ideal applications for the ND 1 table is in Die Attach equipment. Die Attach is one of the central steps in the manufacture of integrated circuits (IC's). In the first step, a wafer full of IC's is sliced up with a diamond dicing saw. After sawing, the individual IC's or «die» are picked off of the sawed wafer and placed onto a metal lead frame in the die attach operation. The lead frame has been prepared with an epoxy adhesive, which secures the die to the leadframe. In subsequent operations the metal pads on the die are connected to the metal leads of the frame providing an electrical connection to the printed circuit board to which the completed IC will eventually be attached. The high speed Z-axis of the die attach machine carries out the actual «pick and place» operation. The individual die are picked from a wafer and placed on the lead frame in a specific location. A machine vision system is used to accurately locate the independent positions, of both the die on the wafer and the leadframe where it will be placed. The accuracy of the joining of the two components is critical to the success of subsequent operations.

Product	**ND 1**
Stroke	25 mm
Nominal stroke	15 mm
Operating orientation	vertical
Position accuracy	± 0.05 mm
Acceleration	30 m/s^2
Straightness and Flatness of travel	0.004 mm

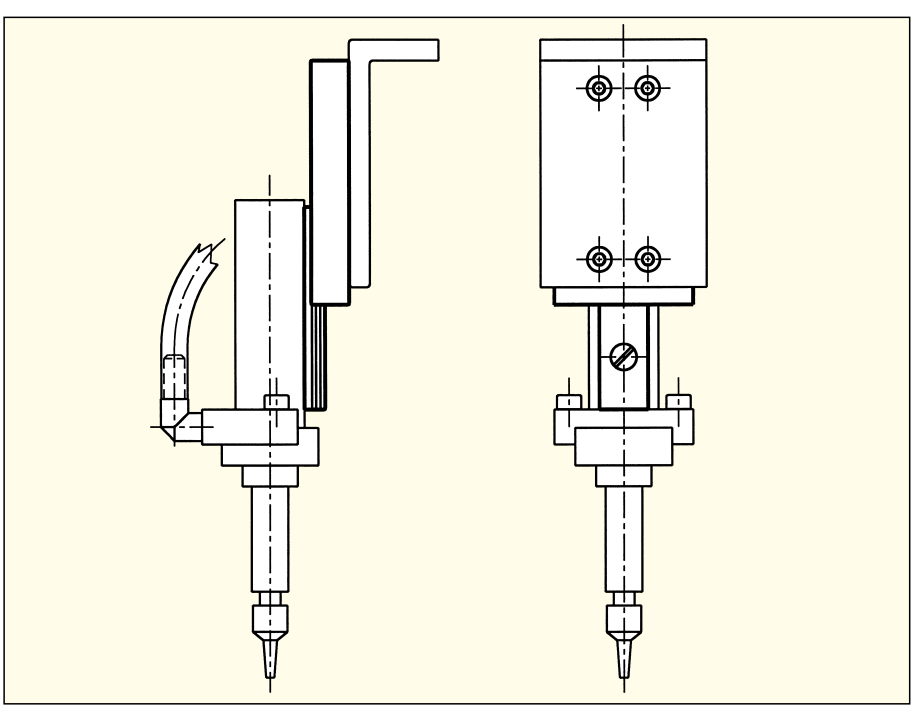

2.2 Multimode Fusion Splicer with NK 1 Tables

Multimode Fusion Splicers are portable optical fibre jointing machines weighing approximately 10 kg. These are used in the field for the installation of optical fibre systems, for example for LAN's (Local Area Networks). Using a high precision process, two optical fibres are fusion joined together. Great accuracy is required so that the transmission quality of the optical fibre is not significantly reduced. Two clamping devices, one for each fibre, accurately locate and hold the two optical fibres and are guided by SCHNEEBERGER NK 1 roller tables. Prior to splicing, the fibre ends are precisely aligned to each other to sub-micron accuracy in three mutually orthogonal axes. This adjustment is effected using SCHNEEBERGER NK 1 tables driven by stepper motors. The accuracy of adjustment is monitored on a built-in LCD screen via an integral CCD camera system and controlled manually by means of a simple handwheel. Thereupon the fusion process takes place to produce a high quality, low-loss joint. This whole process takes on average one minute. Finally, the completed splice is protected by a heat shrink sleeve which is applied using the fusion splicer's integral heatoven.

Product	**NK 1**
Stroke	12 mm
Nominal stroke	10 mm
Operating orientation	vertical/horizontal
Position accuracy	0.001 mm
Acceleration	low
Straightness and Flatness of travel	0.002 mm

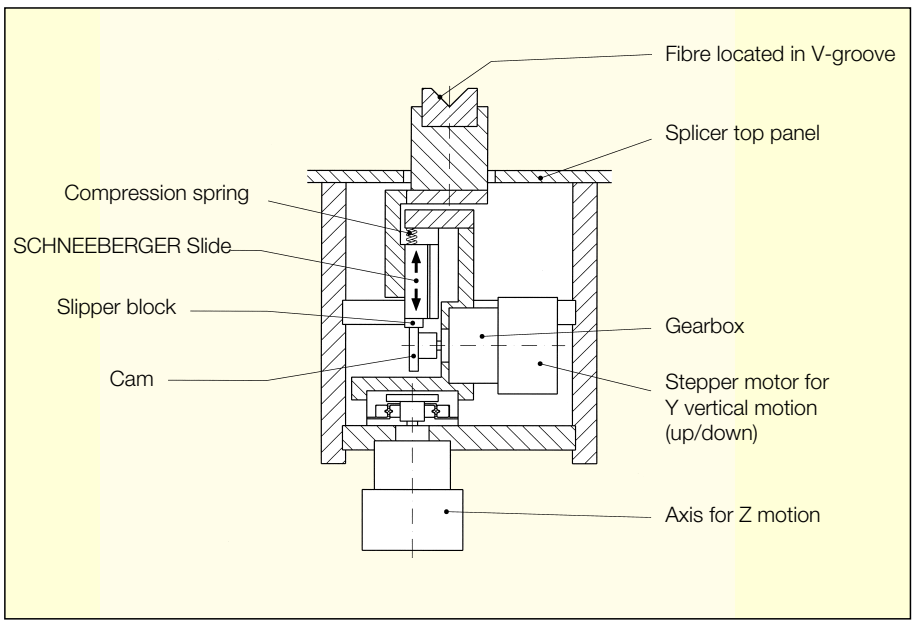

2.3 Printed Circuit Board Assembly with NDN 1

In this application, NDN 1 micro frictionless tables are utilized for placing electronic components such as resistors, capacitors, coils and integrated circuits on printed circuit boards. With a gripper installed on the top of the SCHNEEBERGER NDN 1 micro frictionless table, the components are picked from a large hopper. The parts are then placed on a specific position on the printed circuit board with a Z-stroke of the table. In this case, the NDN 1 table is driven by a synchronous toothed belt. The SCHNEEBERGER NDN 1 distinguishes itself particularly by its constant precision under the extra demands on service life and accuracy imposed by the high dynamic loading found in this application.

Product	**NDN 1**
Stroke	20 mm
Nominal stroke	15 mm
Operating orientation	vertical
Position accuracy	0.03 mm
Acceleration	up to 15 m/s^2
Straightness and Flatness of travel	0.003 mm

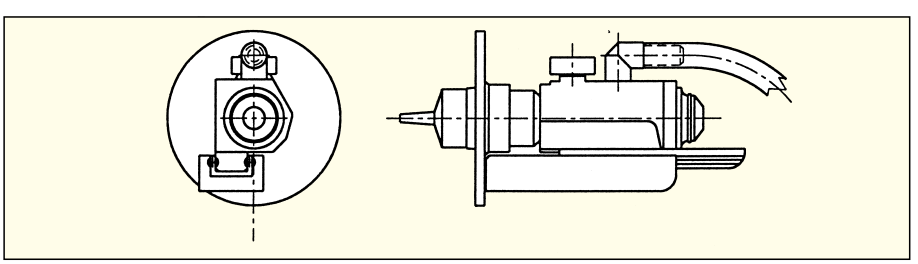

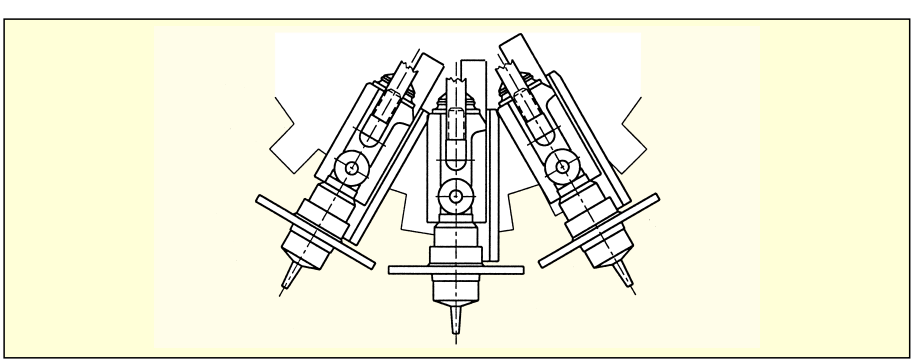

2.4 Laser Measuring Device with ND 1

In section 2.2 Multimode Fusion Splicer, the connecting of glass fibres in the field was described. This application involves the measurement of glass fibre connections.
The measuring procedure is based on the angle change of a reflector, in which the wave length of the laser beam is changed and evaluated. The mechanical rotation of the reflector is controlled through a stepping motor drive with a micrometer spindle. The stepping motor is installed on a roller table ND 1, in order to compensate for the longitudinal movement of the micrometer screw. This makes exceptionally high demands on the running characteristics of the roller table, since this has a direct influence on the measurement results.

Product	**ND 1**
Stroke	32 mm
Nominal stroke	25 mm
Operating orientation	horizontal
Position accuracy	no special requirements
Acceleration	low
Straightness and Flatness of travel	0.004 mm

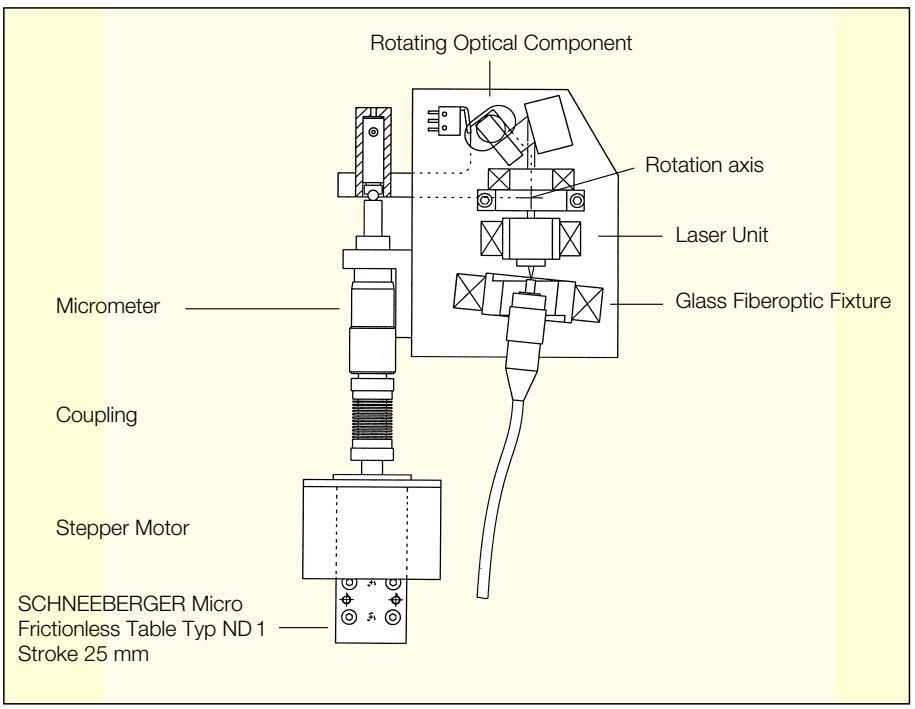

SCHNEEBERGER
LINEAR TECHNOLOGY

3.1 Frictionless Tables Type NK

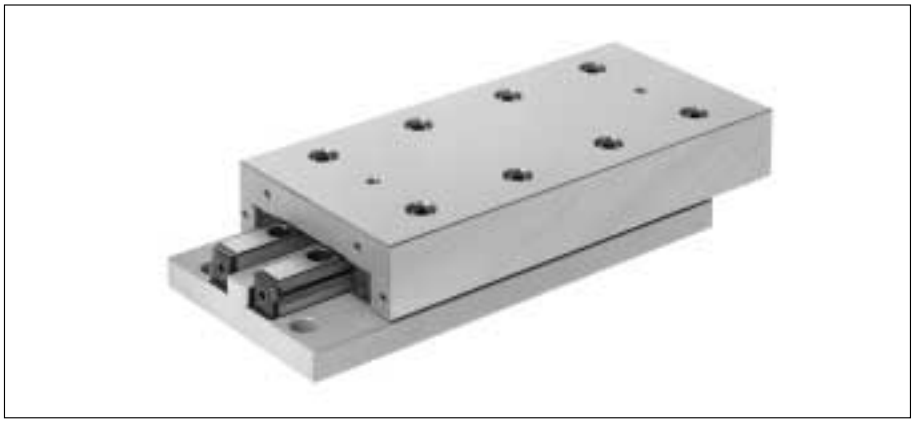

- Single axis model in steel or cast-iron depending on the size
- With roller cages
- 5 sizes
- Lengths from 25 to 510 mm
- Strokes from 10 to 450 mm
- Supports a variety of applications due to the many different sizes
- For highest accuracy requirements
- For highest accelerations available with FORMULA-S

3.2 Material

Sizes NK 1 and 2 = Steel
Sizes NK 3, 6 and 9 = Cast-iron

3.3 Standard Model

Type NK frictionless tables consist of equal length upper and lower sections and type R linear bearings. All tables are equipped with type AC roller cages and type GB endpieces and can be mounted vertically or horizontally. The lower section includes standardized attaching holes. The sides opposite to the setscrews in the upper and lower sections can be used for mounting purposes. For the standard model stroke limiting is made by means of two screws in the upper section and one screw in the lower section. These screws can withstand only small forces or impacts in the direction of motion and should not be used as stops. With FORMULA-S these screws are no more necessary due to the cage assist system.

3.4 Special Models

Standard Attaching Holes (–B)
In the upper section (other hole configurations on request)

Roller Cages Type EE (–EE)
Plastic material, only available for sizes 6 and 9. Provides sealing against dirt and dust; therefore somewhat stiffer motion

Ball Cages Type AK (–AK)
For reduced sensitivity to dirt. Lower load carrying capacity

Cage assist integrated (–KS)
for high dynamics and all assembly orientations for sizes 3 and 6

3.5 Specifications

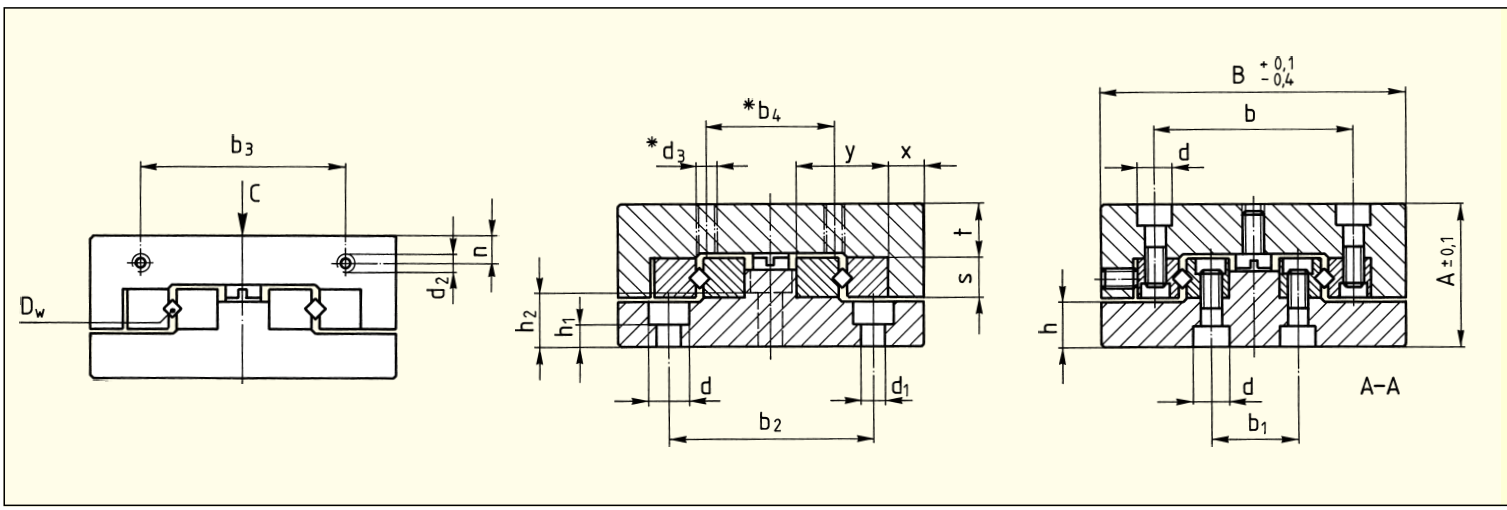

Order No.	Dimensions (mm) A	B	D_w	H	L	L_1	L_2	$*L_3$	L_4	L_5	$*L_6$	L_7	b	b_1	b_2	b_3	$*b_4$	d	d_1
NK 1-25				**10**	25	1×10		–		3.0									
NK 1-35				**18**	35	2×10		1×10		4.5									
NK 1-45				**25**	45	3×10		2×10		6									
NK 1-55	**17**	**30**	1.5	**32**	55	4×10	10	3×10	7.5	7.5	12.5	3.5	18.4	8.6	22	12	10	4.1	2.55
NK 1-65				**40**	65	5×10		4×10		8.5									
NK 1-75				**45**	75	6×10		5×10		11									
NK 1-85				**50**	85	7×10		6×10		13.5									
NK 2-35				**18**	35	1×15		–		3									
NK 2-50				**30**	50	2×15		1×15		4.5									
NK 2-65				**40**	65	3×15		2×15		7									
NK 2-80	**21**	**40**	2	**50**	80	4×15	15	3×15	10	9.5	17.5	5	25	11	30	16	15	6	3.5
NK 2-95				**60**	95	5×15		4×15		12									
NK 2-110				**70**	110	6×15		5×15		14.5									
NK 2-125				**80**	125	7×15		6×15		17									
NK 3-55				**30**	55	1×25		–		5.5									
NK 3-80				**45**	80	2×25		1×25		10.5									
NK 3-105				**60**	105	3×25		2×25		15.5									
NK 3-130	**28**	**60**	3	**75**	130	4×25	25	3×25	15	20.5	27.5	10	39	17	40	40	25	7.5	4.5
NK 3-155				**90**	155	5×25		4×25		25.5									
NK 3-180				**105**	180	6×25		5×25		30.5									
NK 3-205				**130**	205	7×25		6×25		30.5									

* Only with special model B

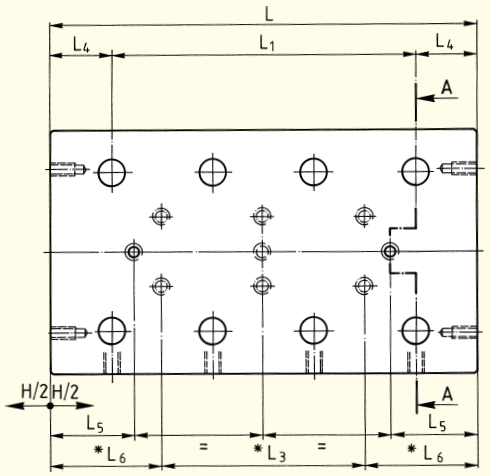

Layout of the standard attaching holes in the lower section

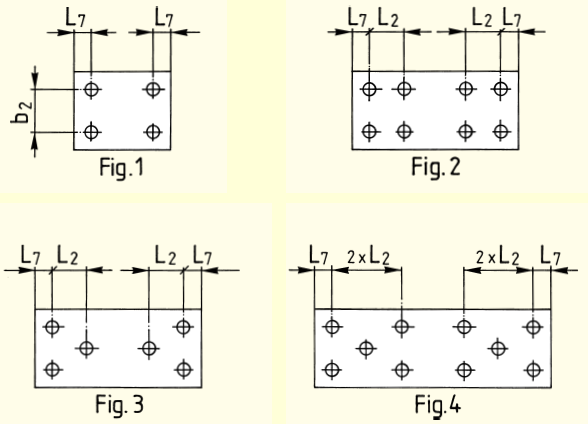

d_2	$*d_3$	h	h_1	h_2	n	s	t	x	y	C in N	M_L in Nm	M_Q in Nm	Weight in kg	Fig.
										250	1.20	1.69	0.08	1
										350	1.80	2.36	0.112	1
										450	2.40	3.04	0.144	1
M2	M2	5.5	3	–	2.5	4	7	4	8.5	550	3.00	3.71	0.176	2
										650	3.60	4.39	0.208	2
										750	4.20	5.06	0.24	2
										900	5.10	6.08	0.277	2
										425	2.72	3.83	0.18	1
										595	4.08	5.36	0.26	1
										850	6.12	7.65	0.34	1
M2	M3	6.5	3	–	3.4	6	8	5	12	1020	7.48	9.18	0.42	2
										1275	9.52	11.48	0.5	2
										1445	10.88	13.01	0.58	2
										1700	12.92	15.30	0.68	2
										910	7.80	12.74	0.57	1
										1300	11.70	18.20	0.8	1
										1820	16.90	25.48	1.03	1
M3	M4	9	4.5	10	5.5	8	10.5	7	18	2210	20.80	30.94	1.26	1
										2730	26.00	38.22	1.49	3
										3120	29.90	43.68	1.72	3
										3510	33.80	49.14	1.95	4

Ordering example: 1 Frictionless table NK 3-105 or 1 Frictionless table NK 3-105-B

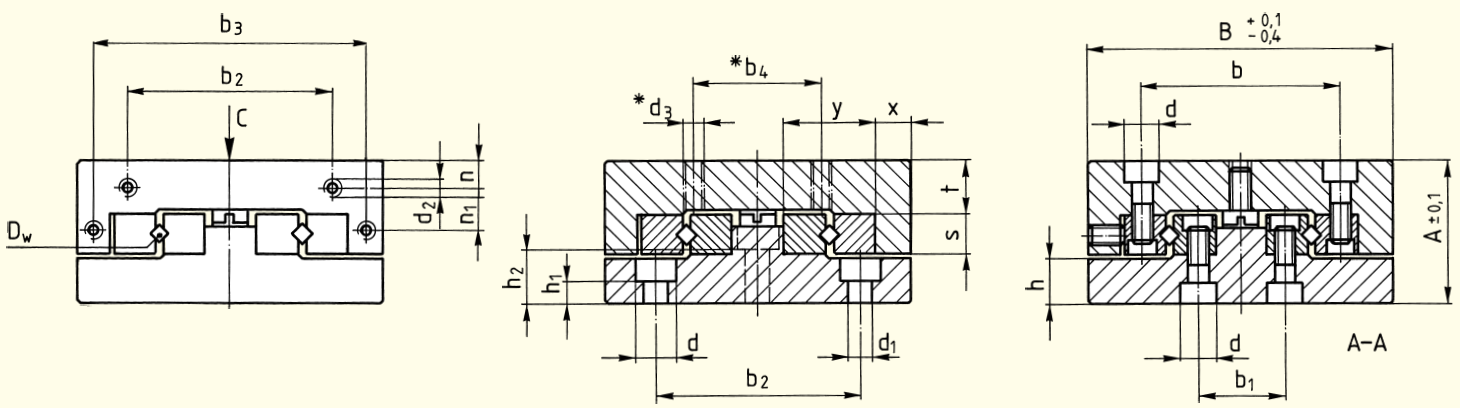

Order No.	Dimensions (mm) A	B	D_w	H	L	L_1	L_2	$*L_3$	L_4	L_5	$*L_6$	L_7	b	b_1	b_2	b_3	$*b_4$	d	d_1
NK 6-110				**60**	110	1 × 50		–		16.5									
NK 6-160				**95**	160	2 × 50		1 × 50		24									
NK 6-210				**130**	210	3 × 50		2 × 50		31.5									
NK 6-260	**45**	**100**	6	**165**	260	4 × 50	50	3 × 50	30	39	55	10	64	26	60	92	50	11	7
NK 6-310				**200**	310	5 × 50		4 × 50		46.5									
NK 6-360				**235**	360	6 × 50		5 × 50		54									
NK 6-410				**265**	410	7 × 50		6 × 50		64									
NK 9-210				**130**	210	1 × 100		–		27									
NK 9-310	**60**	**145**	9	**180**	310	2 × 100	100	1 × 100	55	52	105	55	98	46	90	135	80	15	9
NK 9-410				**350**	410	3 × 100		2 × 100		17									
NK 9-510				**450**	510	4 × 100		3 × 100		17									

* Only with special model B

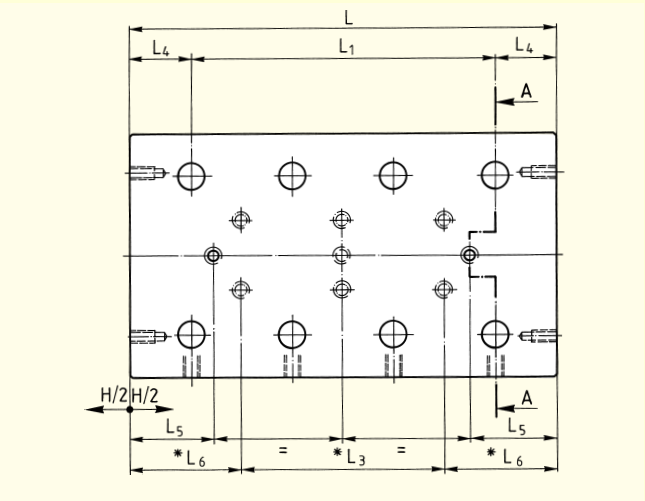

Layout of the standard attaching holes in the lower section

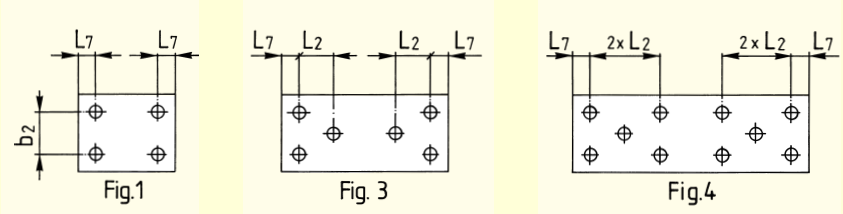

d_2	$*d_3$	h	h_1	h_2	n	n_1	s	t	x	y	C in N	M_L in Nm	M_Q in Nm	Weight in kg	Fig.
											3710	57.24	83.48	3.07	1
											5830	95.40	131.18	4.46	1
											7420	124.02	166.95	5.85	3
M4	M6	13	6	15	8	15	15	16	12	31	9540	162.18	214.65	7.24	3
											11660	200.34	262.35	8.63	3
											13250	228.96	298.13	10.02	4
											15370	267.12	345.83	11.41	4
											11700	291.20	421.20	11.8	1
M4	M8	16	7	20	11	20	22	21	14.5	44	18200	473.20	655.20	17.3	1
											20800	546.00	748.80	22.8	3
											24700	655.20	889.20	28.3	3

Ordering example: 1 Frictionless table NK 6-160 or 1 Frictionless table NK 6-160-B

3.6 Accessories

Simple Guards (–A)
against the ingress of dirt from above

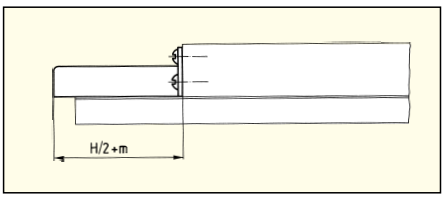

Size	1	2	3	6	9
m	2	3	4	6	11.5

SCHNEEBERGER LINEAR TECHNOLOGY

4.1 Frictionless Tables Type NKL

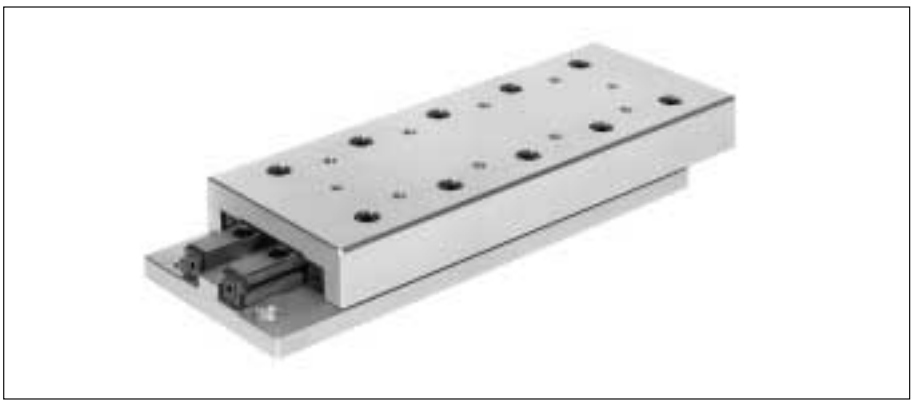

- Single axis model
- Light design, table components in aluminum
- 4 sizes
- With roller cages
- Lengths from 25 to 410 mm
- Strokes from 10 to 280 mm
- For highest accelerations available with FORMULA-S

4.2 Material

Aluminum

4.3 Standard Model

Type NKL frictionless tables consist of equal length upper and lower sections and type R linear bearings. All tables are equipped with type AC roller cages and type GB endpieces and can be mounted vertically or horizontally. In the upper and lower sections there are standardized attaching holes. The sides opposite to the setscrews in the upper and lower sections can be used for mounting purposes. For the standard model stroke limiting is made by means of two screws in the upper section and one screw in the lower section. These screws can withstand only small forces or impacts in the direction of motion and should not be used as stops.
With FORMULA-S these screws are no more necessary due to the cage assist system.

4.4 Special Model

Ball Cages Type AK (–AK)
For reduced sensitivity to dirt. Lower load carrying capacity

Roller Cages Type EE (–EE)
Plastic material, only available for size 6. Provides sealing against dirt and dust. Somewhat stiffer motion

Cage assist integrated (–KS)
for high dynamics and all assembly orientations for size 3 and 6

4.5 Specifications

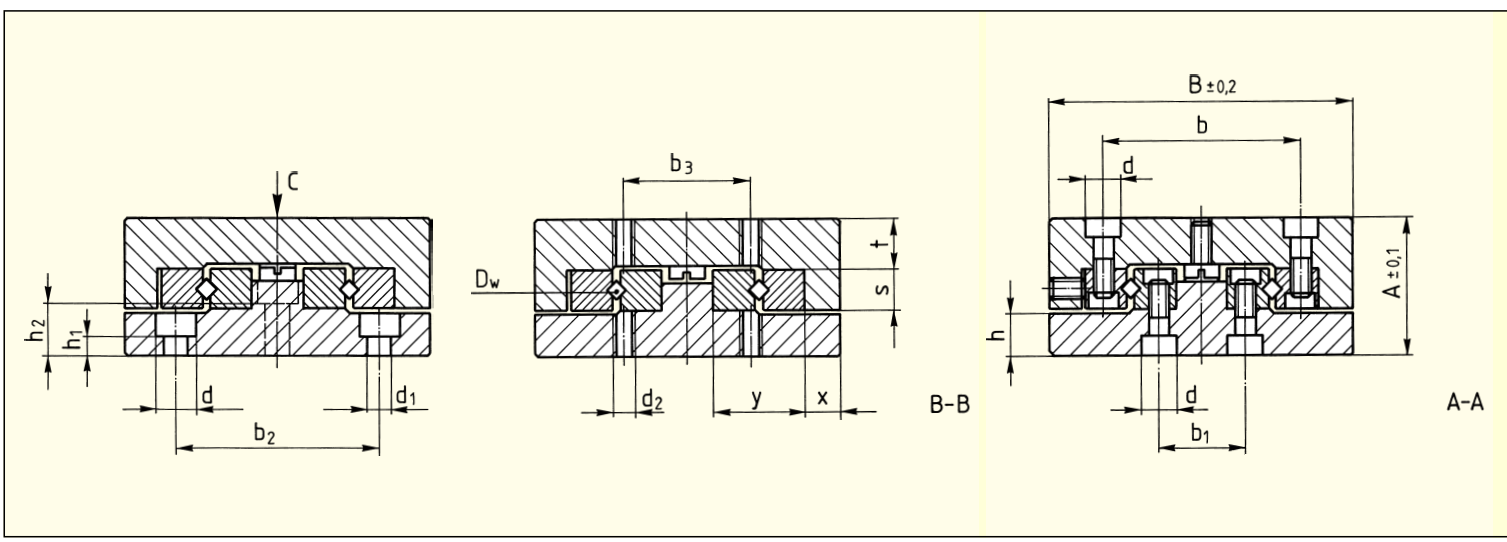

Order No.	Dimensions (mm) A	B	D_w	H	L	L_1	L_2	L_3	L_4	L_5	L_6	L_7	b	b_1	b_2	b_3	d
NKL 1-25				**10**	25	1×10		–		3.0							
NKL 1-35				**18**	35	2×10		1×10		4.5							
NKL 1-45				**25**	45	3×10		2×10		6							
NKL 1-55	**13**	**30**	1.5	**32**	55	4×10	10	3×10	7.5	7.5	12.5	3.5	18.4	8.6	22	10	4.1
NKL 1-65				**40**	65	5×10		4×10		8.5							
NKL 1-75				**45**	75	6×10		5×10		11							
NKL 1-85				**50**	85	7×10		6×10		13.5							
NKL 2-35				**18**	35	1×15		–		3							
NKL 2-50				**30**	50	2×15		1×15		4.5							
NKL 2-65				**40**	65	3×15		2×15		7							
NKL 2-80	**21**	**40**	2	**50**	80	4×15	15	3×15	10	9.5	17.5	5	25	11	30	15	6
NKL 2-95				**60**	95	5×15		4×15		12							
NKL 2-110				**70**	110	6×15		5×15		14.5							
NKL 2-125				**80**	125	7×15		6×15		17							

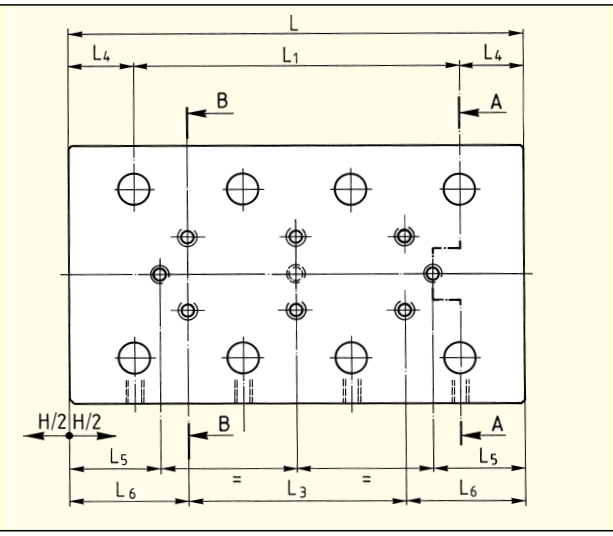

Layout of the standard attaching holes in the lower section

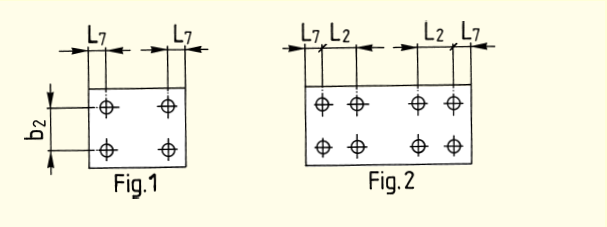

d_1	d_2	h	h_1	h_2	s	t	x	y	C in N	M_L in Nm	M_Q in Nm	Weight in kg	Fig.
									250	1.20	1.69	0.04	1
									350	1.80	2.36	0.05	1
									450	2.40	3.04	0.06	1
2.55	M2	4.1	1.6	–	4	4.5	4	8.5	550	3.00	3.71	0.075	2
									650	3.60	4.39	0.09	2
									750	4.20	5.06	0.105	2
									900	5.10	6.08	0.12	2
									425	2.72	3.83	0.11	1
									595	4.08	5.36	0.15	1
									850	6.12	7.65	0.19	1
3.5	M3	6.7	3.2	–	6	8	5	12	1020	7.48	9.18	0.23	2
									1275	9.52	11.48	0.27	2
									1445	10.88	13.01	0.31	2
									1700	12.92	15.30	0.35	2

Ordering example: 1 Frictionless table NKL 2-65

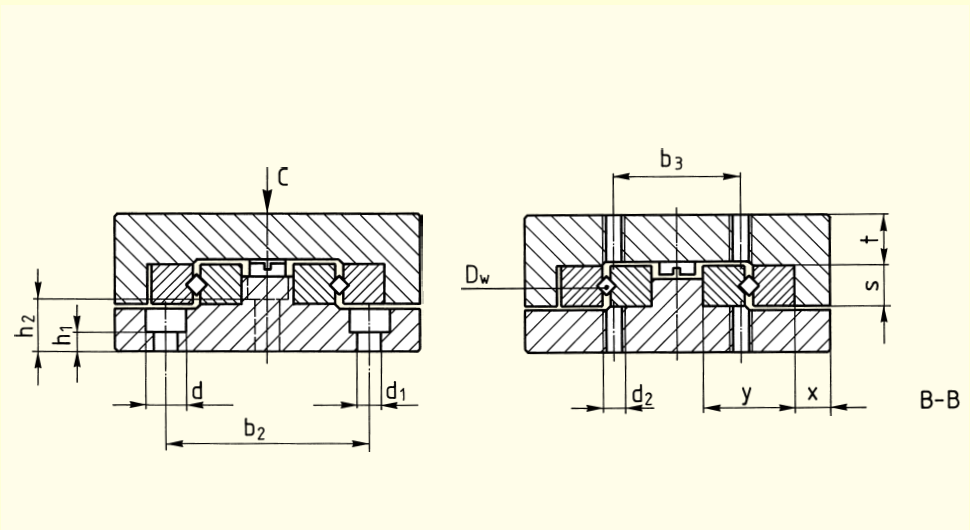

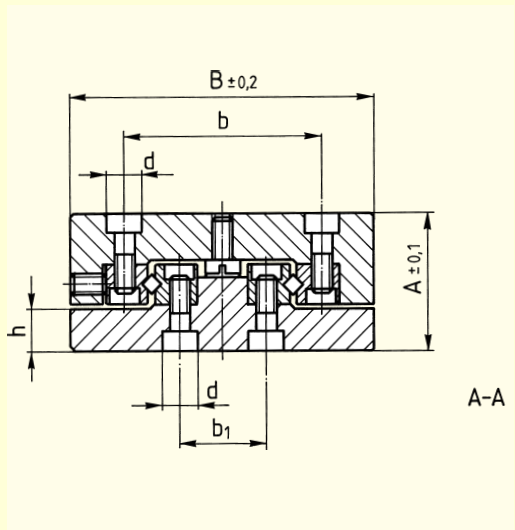

Order No.	Dimensions (mm) A	B	D_w	H	L	L_1	L_2	L_3	L_4	L_5	L_6	L_7	b	b_1	b_2
NKL 3-55				**30**	55	1 × 25		–		5.5					
NKL 3-80				**45**	80	2 × 25		1 × 25		10.5					
NKL 3-105				**60**	105	3 × 25		2 × 25		15.5					
NKL 3-130				**75**	130	4 × 25		3 × 25		20.5					
NKL 3-155				**90**	155	5 × 25		4 × 25		25.5					
NKL 3-180	**25**	**60**	3	**105**	180	6 × 25	25	5 × 25	15	30.5	27.5	10	39	17	40
NKL 3-205				**130**	205	7 × 25		6 × 25		30.5					
NKL 3-230				**155**	230	8 × 25		7 × 25		30.5					
NKL 3-255				**180**	255	9 × 25		8 × 25		30.5					
NKL 6-110				**60**	110	1 × 50		–		16					
NKL 6-160				**95**	160	2 × 50		1 × 50		23.5					
NKL 6-210				**130**	210	3 × 50		2 × 50		31					
NKL 6-260	**40**	**100**	6	**165**	260	4 × 50	50	3 × 50	30	38.5	55	10	64	26	60
NKL 6-310				**200**	310	5 × 50		4 × 50		46					
NKL 6-360				**265**	360	6 × 50		5 × 50		38.5					
NKL 6-410				**280**	410	7 × 50		6 × 50		56					

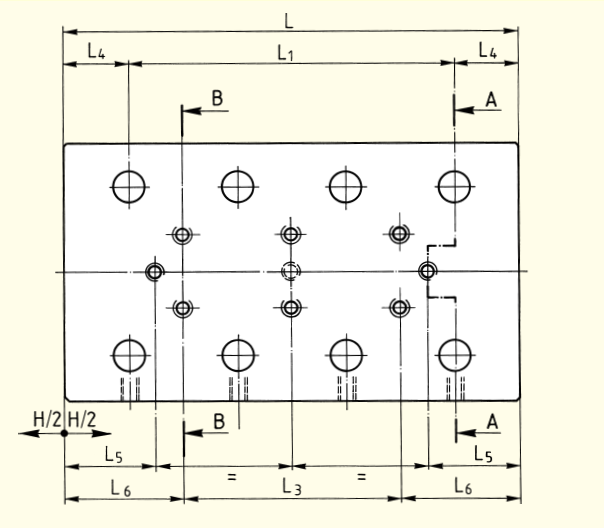

Layout of the standard attaching holes in the lower section

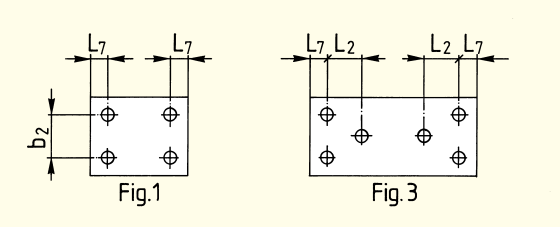

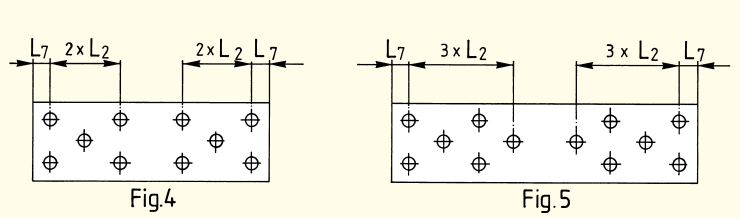

b_3	d	d_1	d_2	h	h_1	h_2	s	t	x	y	C in N	M_L in Nm	M_Q in Nm	Weight in kg	Fig.
											910	7.80	12.74	0.29	1
											1300	11.70	18.20	0.42	1
											1820	16.90	25.48	0.55	1
											2210	20.80	30.94	0.68	1
25	7.5	4.5	M4	8.2	3.2	7.5	8	8.5	7	18	2730	26.00	38.22	0.81	3
											3120	29.90	43.68	0.94	3
											3510	33.80	49.14	1.07	4
											3770	36.40	52.78	1.2	4
											4160	40.30	58.24	1.33	5
											3710	57.24	83.48	1.5	1
											5830	95.40	131.18	2.25	1
											7420	124.02	166.95	3	3
50	11	7	M6	11.5	4.5	12.5	15	13	12	31	9540	162.18	214.65	3.75	3
											11660	200.34	262.35	4.5	3
											12720	219.42	286.20	5.25	3
											14840	257.58	333.90	6	3

Ordering example: 1 Frictionless table NKL 6-260

SCHNEEBERGER LINEAR TECHNOLOGY

5.1 Micro Frictionless Tables Type ND

- Single axis model in steel
- 3 sizes
- With roller cages
- Lengths from 25 to 155 mm
- Strokes from 12 to 90 mm
- Low friction force
- For highest accuracy requirements

5.2 Material

Steel

5.3 Standard Model

Type ND micro frictionless tables consist of equal length upper and lower sections. The double V-shaped lower section is through hardened.
All sizes are equipped with type AC roller cages and can be mounted horizontally or vertically. In the upper and lower sections there are standardized attaching holes.

5.4 Special Model

Ball Cages Type AK (–AK)
For reduced sensitivity to dirt. Lower load carrying capacity

5.5 Specifications

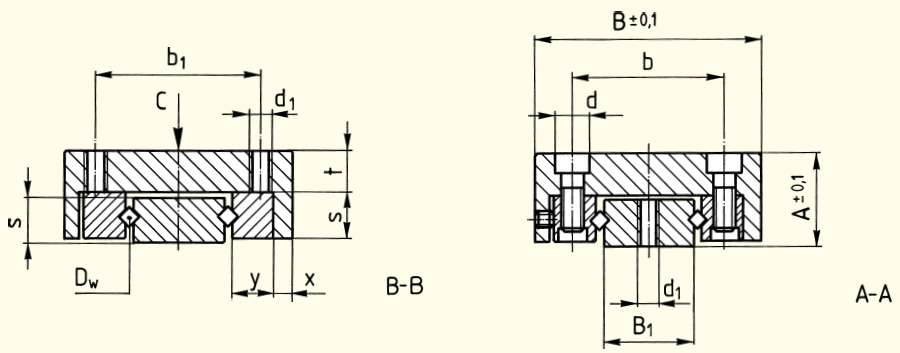

Order No.	Dimensions (mm) A	B	B_1	D_w	H	L	L_1	L_2	L_3
ND 1-25.12					**12**	25	1 × 10		1 × 18
ND 1-35.18	**8**	**20**	7	1.5	**18**	35	2 × 10	7.5	1 × 28
ND 1-45.25					**25**	45	3 × 10		1 × 20
ND 1-55.32					**32**	55	4 × 10		1 × 30
ND 2-65.40					**40**	65	3 × 15		1 × 30
ND 2-80.50	**12**	**30**	12	2	**50**	80	4 × 15	10	1 × 45
ND 2-95.60					**60**	95	5 × 15		2 × 30
ND 3-105.60					**60**	105	3 × 25		1 × 50
ND 3-130.75	**16**	**40**	15	3	**75**	130	4 × 25	15	1 × 75
ND 3-155.90					**90**	155	5 × 25		2 × 50

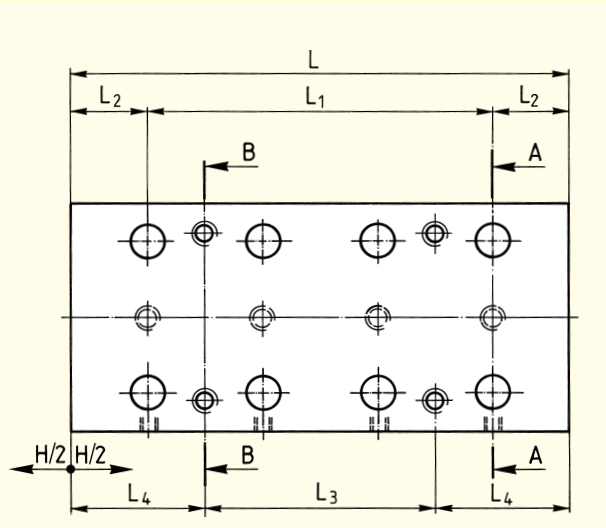

Layout of the standard attaching holes

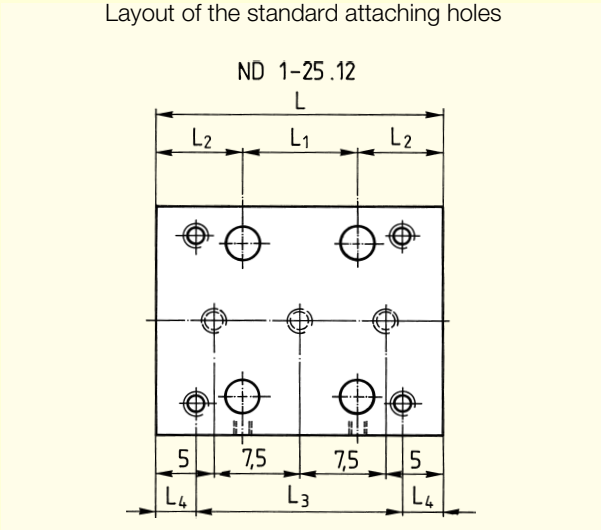

L_4	b	b_1	d	d_1	s	t	x	y	C in N	M_L in Nm	M_Q in Nm	Weight in kg
3.5									200	0.90	0.80	0.02
3.5	12.4	14	4.2	M 2.5	4	3.5	1.95	3.9	300	1.50	1.20	0.03
12.5									400	2.10	1.60	0.04
12.5									550	3.00	2.20	0.05
									765	5.44	5.16	0.16
17.5	20	22	6	M 3	6	5.5	2.3	5.5	1020	7.48	6.89	0.19
									1190	8.84	8.03	0.24
									1690	15.60	13.52	0.47
27.5	27	30	7.5	M 4	8	7.5	2.5	8.3	2210	20.80	17.68	0.59
									2730	26.00	21.84	0.70

Ordering example: 1 Micro frictionless table ND 2-80.50

6.1 Micro Frictionless Tables Type NDN

- Single axis model in corrosion resistant steel
- 3 sizes
- With ball cage in brass
- Cage centering mechanism which helps to avoid cage creep
- Length from 10 to 80 mm
- Strokes from 5 to 70 mm
- For highest accuracy requirements
- Suitable for high speed applications

6.2 Material

Corrision resistant steel

6.3 Standard Model

The micro frictionless tables NDN consist of upper and lower parts of the same length and can be utilized horizontally or vertically. They consist of only four components; the lower and the upper part made of stainless steel, the brass cage and the stainless steel rolling elements. The U-shaped cage joins the two guideways together. As a result, the susceptibility to cage drift is essentially eliminated. NDN micro frictionless tables, preloaded in assembly to eliminate play, exhibit extremely low push force. NDN products fulfill high speed requirements with great precision and long service life.

6.4 Specifications

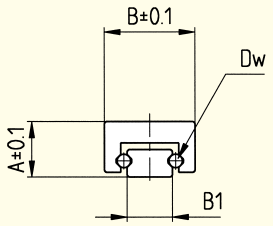

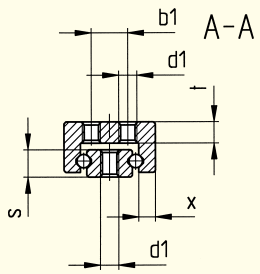

Order No.	Dimensions (mm) A	B	B_1	D_w	H	L
NDN 05-10.05					**5**	10
NDN 05-15.10	**4**	**7**	4	1	**10**	15
NDN 05-20.15					**15**	20
NDN 05-25.20					**20**	25
NDN 1-15.05					**5**	15
NDN 1-20.10					**10**	20
NDN 1-25.15					**15**	25
NDN 1-30.20	**6**	**10**	5	1.5	**20**	30
NDN 1-35.25					**25**	35
NDN 1-40.30					**30**	40
NDN 1-45.35					**35**	45
NDN 1-50.40					**40**	50
NDN 2-30.20					**20**	30
NDN 2-40.30					**30**	40
NDN 2-50.40	**8**	**15**	8	2.5	**40**	50
NDN 2-60.50					**50**	60
NDN 2-70.60					**60**	70
NDN 2-80.70					**70**	80

* The calculation of the carrying capacity for NDN tables has been performed according DIN 636 part 3. A static reliability factor of 3 is taken into consideration.

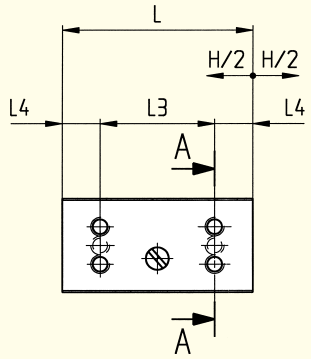

Layout of the standard attaching holes in the lower- and upper section
NDN 05

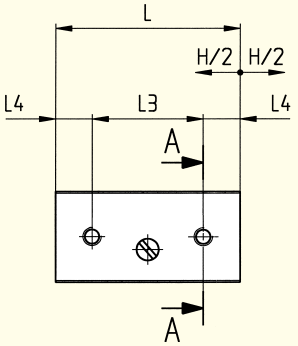

L_3	L_4	b_1	d_1	s	t	x	*C in N	M_L in Ncm	M_Q in Ncm	Weight in g
1 × 5	2.5	–	M 1.6	2.1	1.5	1.1	23	1.5	3	2
1 × 8	3.5						27	2.2	3.6	3
1 × 12	4						36	2.8	4.8	4
1 × 16	4.5						45	3.5	6	5
1 × 8	3.5	4	M 2	3	2.3	1.8	50	9	14	5
1 × 12	4						60	11	17	7
1 × 16	4.5						70	14	20	10
1 × 20	5						80	16	23	12
1 × 24	5.5						90	19	26	14
1 × 28	6						100	21	28	17
1 × 32	6.5						110	24	31	19
1 × 36	7						120	26	34	21
1 × 20	5	7	M 2.5	4.5	2.5	2.7	140	40	55	28
1 × 28	6						170	50	65	36
1 × 36	7						200	60	75	45
3 × 15	7.5						250	80	100	54
3 × 18	8						310	100	120	64
3 × 20	10						370	120	140	73

Ordering example: 1 Frictionless Table NDN 1-30.20

7.1 Acceptance Tolerances

All SCHNEEBERGER frictionless tables are manufactured as standard with the accuracies indicated in the tables. Measurement is in the unloaded state on a flat surface.
The tolerance figures in the tables are for single axis.

Type	L
NK	25–50 55–100 105–160 165–310 315–510
NKL	25–50 55–100 105–160 165–310 315–410
ND	25–50 55–100 105–155
NDN	15–30 35–50 60–80

7.2 Accuracy

Straightness and Flatness
The tolerance for Straightness and Flatness of travel is dependent on the various frictionless table models, the size, the length etc. This tolerance is shown above in chapter 7.1.
Closer tolerances can be supplied on request.

Parallelism
The tolerances shown in the tables are achieved by measuring the frictionless tables in the middle position. For this purpose the frictionless tables are placed unloaded on a flat surface.

Straightness of Travel in µm over Stroke Length; Laterally	Flatness of Travel in µm over Stroke Length; at Top	Parallelism in µm of Table Surfaces; in Middle Position
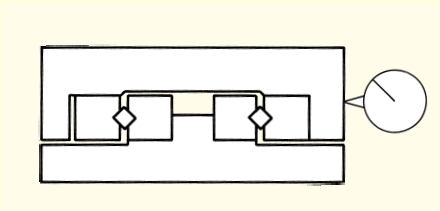	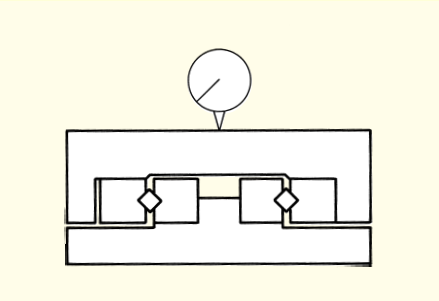	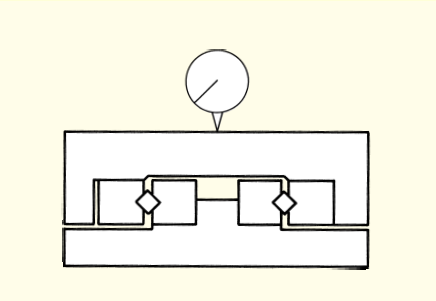
2	2	5
3	2	10
3	3	15
4	3	20
4	4	25
4	4	10
4	4	20
6	6	30
6	6	40
8	8	50
4	4	15
5	5	20
6	6	25
2	2	5
3	3	5
4	4	8

Height Tolerance
The height tolerance is ±0,1 mm.
On request, most types can be supplied in matched pairs to ±0,01 mm.

7.3 Materials

Linear Bearings and Rolling Elements
Where no contrary specifications are agreed the following are valid:
- Linear bearings material No. 1.2510 or 1.2842
- Rolling elements material No. 1.3505
- NDN material No. 1.4034

Table Bodies
Manufactured according to details under each frictionless table type.

7.4 Permissible Operating Temperatures

SCHNEEBERGER frictionless tables can be used at operating temperatures of –40° to +80°C. In cases of doubt, please consult us. Please also note that temperature fluctuations in operation can have an enormous influence when positioning in the micrometer range.

7.5 Lubrication

SCHNEEBERGER frictionless tables are lubricated to protect them against corrosion and wear. The initial factory lubrication can, depending on the operating conditions, suffice for years.
Generally, bearing grease on a lithium saponified base (bearing grease KP2K per DIN 51502 respectively DIN 51825) should be used. Drip feed oiling, occasional oiling or lubricating by means of overspill oil are sufficient. To achieve the lowest rolling friction resistance, mineral base oils are recommended (CLP or HLP; viscosities of ISO VG 15 to 100 per DIN 51519). Soluble oil or coolant emulsions should, on the other hand, be kept away from the guides as they dilute or wash away the lubricant. In addition coolant emulsions tend to dry out and become tacky. Lubricants with solid base additives are also unsuitable. Lubrication intervals depend on various factors such as the loading, ambient conditions etc. Experience has shown that lubricating 2–5 times at equal intervals during the calculated operational life suffices.

7.6 Permissible Velocities and Accelerations

Under normal conditions SCHNEEBERGER frictionless tables with linear bearings with roller or ball cages can be used at velocities of up to 50 m/min.
The permissible acceleration is, in general, 50 m/s^2. These figures can, however, be influenced substantially through the selection of the drive, the load and the length etc. In cases of doubt please consult us.

With FORMULA-S
The cage remains centered during accelerations up to 150 m/s^2 (15g) and oscillation frequencies up to 25 Hz.

7.7 Friction, Running Accuracy and Smoothness

For SCHNEEBERGER frictionless tables with roller or ball cages coefficients of friction range from 0.0005 to 0.003.
In the manufacture of SCHNEEBERGER frictionless tables the requisites for perfect running smoothness are created. SCHNEEBERGER plastic and plastic composite cages also play a large part. For successful application special care must be taken with the mounting of the frictionless tables on an adequately machined, low-deformation base.
You will find further details in the following section.

SCHNEEBERGER LINEAR TECHNOLOGY

8.1 Horizontal and Vertical Fitting

All applications where the direction of motion is horizontal are designated horizontal fitting. All applications where the direction of motion deviates from the horizontal are designated vertical fitting.
All SCHNEEBERGER frictionless tables have preloaded anti-friction guideways and can, therefore, accept moments and forces in any direction (see also 9.2).
FORMULA-S allows all mounting orientations with no cage creep anymore.

8.2 Attaching Frictionless Tables

SCHNEEBERGER frictionless tables are normally attached to the base structure with standardized through holes in the base. Various models have, additionally, threaded holes which permit alternate mounting.

8.3 Preloading Frictionless Tables

All SCHNEEBERGER frictionless tables have playfree, preloaded antifriction guideways and can, therefore, be used without any additional measures accomplished. Preloading is by means of adjusting screws or ball selection by diameter and needs no readjustment.

8.4 Design of Base Unit

The advantages of SCHNEEBERGER frictionless tables are best exploited on a rigid, low-deformation, accurately machined construction. The surface quality of the supporting surfaces has no direct influence on the operation and run-out behavior of the frictionless tables. We recommend however, that they should be manufactured with a surface roughness of between N5 and N7, in order to achieve the desired planeness and parallelism tolerances.

8.5 Accessories for Frictionless Tables

According to the type, SCHNEEBERGER frictionless tables type NK can be supplied with accessories.
You can find the relative information under the respective frictionless table types. Should the standard accessories not meet your series production requirements, we are in a position to supply customized components.

9 Dimensioning Frictionless Tables

9.1 Load Carrying Capacity and Operational Life

In applying frictionless tables, the primary consideration is the relationship of the applied load to the load carrying capacity. The elastic deformation (rigidity) must also be evaluated. The load carrying capacities of the individual frictionless tables are based on the fundamentals established by ISO and DIN for the calculation of roller bearings (ISO 281, for NDN DIN 636, part 3). The load carrying capacity C is the load with which a nominal operational life of 100 000 m travel is achieved, given that the size and direction of the load remain unchanged and the line of application is vertical onto the frictionless table surface.

By definition, the latest research results have shown that the static load should not be greater than the dynamic load. The reason for this lies in the fatigue behavior which is always initiated at the highest loaded point. In the case of an absolutely constant load during standstill and in operation, the fatigue process will start at that point where the static load is present longest. The C-values given are used in the operational life equation to calculate the operational life resulting with a given load.

The operational life is the travel in metres which is made by a frictionless table before the first signs of metal fatigue appear on any of the anti-friction guideway components. The B_{10} operational life is achieved when 90% of a statistical sample of frictionless tables meet or exceed the prescribed amount of travel.

Dynamic loading capacity C

As previously mentioned, the load carrying capacity C is based on an operational life of 100 000 m. Some manufacturers use, for various reasons, a larger load carrying capacity with 50 000 metres operational life. The C_{50} values for SCHNEEBERGER frictionless tables are calculated as follows:

$C_{50} = C \cdot 1.23$ for frictionless tables with rollers

$C_{50} = C \cdot 1.26$ for frictionless tables with balls

Life Expectancy

According to the DIN and ISO standards, the load carrying capacities for roller bearings are given in such a manner that from the operational life equation a value results which, with 90% probability, will be exceeded. Should this probability not suffice, then the operational life must be shortened with the a_1 factor per the following tables:

Life Expectancy %	90	95	96	97	98	99
a_1	1	0.62	0.53	0.44	0.33	0.21

Operational life calculation

The operational life L, the dynamic load carrying capacity C (N) and the loading P (N) have the following relationship:

$$L = a_1 \left(\frac{C}{P}\right)^{10/3} \cdot 10^5 \text{ m for rollers and needles}$$

$$L = a_1 \left(\frac{C}{P}\right)^{3} \cdot 10^5 \text{ m for balls}$$

whereby a is the probable life expectancy factor. The operational life in hours can be calculated when the single stroke H (m) and the time needed for it t (s) are known:

$$L_h = \frac{L \cdot t}{H \cdot 3600} \text{ in h}$$

9.2 Moment Loading

In addition to the load carrying capacity C, you will find in the tables of dimensions for the individual frictionless tables the permissible values for moment loading. M_L is the maximum possible torque lengthwise and M_Q the maximum possible torque crosswise.

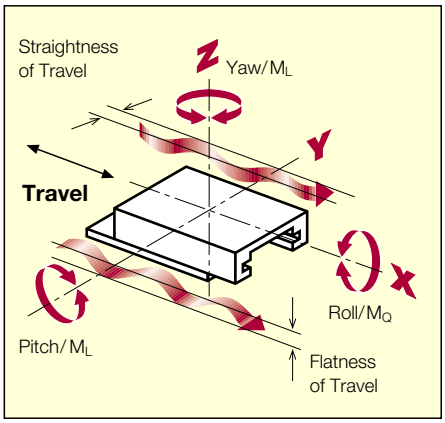

SCHNEEBERGER REPRESENTATIVES

AUSTRALIA
RJM Engineering Supplies
Tamar Street 13
VIC 3134 Ringwood
Phone +61 398 79 4881
Fax +61 398 79 3700
E-Mail: rjmeng@rjmeng.com.au

BRAZIL
IBATECH Tecnologia.Ltda.
Av. Amazonas, 974
90240-542 Porto Alegre-RS
Phone +55 51 3337 1481
Fax +55 51 3337 5265
E-Mail: ibacorp@iba-corp.com

CHINA
Servo Dynamics Co., Ltd.
12#-2-1 Chuangye Building
No. 125 Binhe Road,
Suzhou New District
215011 Jiangsu
Phone +86 (512) 6809 7576
Fax +86 (512) 6809 7690
E-Mail: info@servodynamics.com.cn

DENMARK
HERSTAD + PIPER A/S
Jernholmen 48c
2650 Hvidovre
Phone +45 36 77 4000
Fax +45 36 77 7740
E-Mail: mail@herstad-piper.dk

FINLAND
EIE Maskin Oy
PL, 80 Asematie 1
10601 Tammisaari
Phone +358 19 223 9100
Fax +358 19 223 9199

INDIA
NRB Bearings Limited Agency Division
405'A' Wing, Mittal Towers
47 (6) M.G. Road
560 001 Bangalore
Phone 080-2558 6911 / 2559 6089 / 2558 6995
Fax 080-2559 6091
E-Mail: maheshwari@nrbbearings.co.in

NRB Bearings Limited Agency Division
Office Mumbai
Dhannur,15 Sir P M Road, Fort
400 001 Mumbai
Phone 022-2266 4160 / 2266 4998
Fax 022-2266 0412 / 2267 9850
E-Mail: k.mohan@nrbbearings.co.in

Office:
Mr. Bevin Sequeira Palmyra
Plot 593-B, 21st Road
400 050 Bandra,Mumbai
Phone +91 022 2604 8831
E-Mail: bfsequeira@yahoo.co.uk

NETHERLANDS
Office:
Mr. Maurice Bastings
Beekerweg 65
NL-6235CB Ulestraten
Phone +31 (0)43 365 4532
Fax +31 (0)43 365 3579
E-Mail: info-nl@schneeberger.com

POLAND
TECHNIKA LINIOWA
ROLLICO Rolling Components
Ul. PCK 24
42-700 Lubliniec
Phone +48 34 353 0838
Fax +48 34 351 0431
E-Mail: info@rollico.com

REPUBLIC OF KOREA
Office:
Mr. Ki-Ho Kim
Kodeok 2 danji Jukong APT.261-402
Kodeok 2-dong, Kangdong-Ku
134-757 Seoul
Phone +82 2 442 0971
Fax +82 2 442 2971
E-Mail: khkim@schneeberger.com

LiATO Korea Inc.
12-15, Moonhyung-Ri, Opo-Eup
Kwangjoo-City
464-894 Kyonggi-Do
Phone +82 31 766 1434(6)
Fax +82 31 766 1438
E-Mail: imwos@kornet.net

Lubo Industries Ltd.
640-12, Gojan-Dong
Namdong-Ku
Incheon
Phone +82 32 821 5656
Fax +82 32 821 9501
E-Mail: luboinc@luboinc.co.kr

NUMACS Corporation Ltd.
Rm303, Namdong building, 987-11
Mansu-dong, Namdung-ku
405-204 Incheon
Phone +82 32 461 8110
Fax +82 32 461 8112
E-Mail: casypark@unitel.co.kr

INTECH Automation Inc.
FL 13,94-46, Youngdeungpo 7-Ga
Youngdeungpo-Ku
150-037 Seoul
Phone +82 2 2632 6770
Fax +82 2 2632 6880
E-Mail: intech01@kornet.net

SINGAPORE
Servo Dynamics
Kaki Bukit Road 1 No. 10
#01-30 Kaki Bukit Park
416175 Singapore
Phone +65 6844 0288
Fax +65 6844 0070
E-Mail: servodynamics@servo.com.sg

SLOVAKIA
LINEATECH, s.r.o.
ul. Puste c. 861
013 22 Rosina
Phone +421 41 500 5177
Fax +421 41 500 5178
Mobile +421 905 253721
E-Mail: sukala@lineatech.sk

SOUTH AFRICA
Fischli & Fuhrmann Ltd.
P.O.Box 253
1600 Isando Transval
Phone +27 11 974 5571
Fax +27 11 974 5574
E-Mail: info@fifu.co.za

Office:
Mr. Mike Owen
LIATO S A (PTY) LTD
513 Marine Drive
4052 Durban
Phone +27 31 467 179
Fax +27 31 467 0179
E-Mail: mike@liato.co.za

SWEDEN
EIE Maskin AB
Box 13031
402 51 Goeteborg
Phone +46 31 707 4800
Fax +46 31 195 255
E-Mail: eie@eie.se

TAIWAN
Ever Bright Precision Ltd.
1F, no. 52, Lane 10
Phone +886 2 2659 5586
Fax +886 2 2659 5587
E-Mail: sales@everbright.com.tw

TURKEY
Office:
BIRLIK RULMAN PAZ.LTD.STI.
Kemeralti Cad. No:20
80030 Karakoy-Istanbul
Phone +90 212 249 5495
Fax +90 212 244 2140
E-Mail: birlik@birlikrulman.com

CATALOGUES

MONORAIL and AMS
LINEAR BEARINGS and Recirculating units
SLIDES
MINIRAIL
AUTOMATION

BROCHURES

NanoC
NanoX
POWERTRACK
Mineral casting RHENOCAST®

SCHNEEBERGER COMPANIES

SWITZERLAND

SCHNEEBERGER AG
St. Urbanstrasse 12
4914 Roggwil/BE
Phone +41 62 918 41 11
Fax +41 62 918 41 00

E-Mail:
info-ch@schneeberger.com
www.schneeberger.com

GERMANY

SCHNEEBERGER GmbH
Gräfenau, Postfach 70
75339 Höfen/Enz
Phone +49 7081 782 0
Fax +49 7081 782 124

E-Mail:
info-d@schneeberger.com

ITALY

SCHNEEBERGER S.p.A.
Via S. Gottardo, 10
21021 Angera VA
Phone +39 0331 93 2010
Fax +39 0331 93 1655

E-Mail:
info-i@schneeberger.com

USA

SCHNEEBERGER Inc.
11 DeAngelo Drive
Bedford, MA 01730
Phone +1 781 271 0140
Fax +1 781 275 4749

E-Mail:
info-usa@schneeberger.com

CHINA

SCHNEEBERGER (Shanghai) Co., Ldt.
Denghui Lu 1128, Minhand District
Shanghai 201108
Phone +86 21 6209 0037 / 27
Fax +86 21 6209 0102

E-Mail:
info-cn@schneeberger.com

JAPAN

Nippon SCHNEEBERGER KK 1
1-49-12 Shimouma, Setagaya-ku
Tokyo 154-0002
Phone +81 3 5779 7339
Fax +81 3 3487 6010

E-Mail:
info-j@schneeberger.com

SCHNEEBERGER SALES DEPARTMENTS

AUSTRIA

Phone +43 2 2387 2945
Fax +43 2 2387 2983
Mobile +43 67 6935 1035

E-Mail:
info-a@schneeberger.com

BELGIUM, THE NETHERLANDS AND LUXEMBOURG

Phone +31 4 3365 4532
Fax +31 4 3365 3579
Mobile +31 6 5326 3929

E-Mail:
info-nl@schneeberger.com

NORTH FRANCE

Phone +32 6833 7773
Fax +32 6833 3863
Mobile +32 4 7978 1870

E-Mail:
info-f@schneeberger.com

SOUTH FRANCE

Phone +33 4 7239 5223
Fax +33 4 7239 5224
Mobile +33 6 0941 6269

E-Mail:
info-f@schneeberger.com

GREAT BRITAIN

Phone +44 16 2582 7708
Fax +44 16 2582 7780
Mobile +44 77 8814 5645

E-Mail:
info-uk@schneeberger.com

ISRAEL

Phone +972 9767 9499
Fax +972 9767 3397
Mobile +972 5 0551 7920

E-Mail:
info-il@schneeberger.com

KOREA

Phone +82 2442 0971
Fax +82 2442 2971
Mobile +82 1 6202 0971

E-Mail:
info-k@schneeberger.com

POLAND, SLOVAKIA AND CZECH REPULIC

Phone +420 5 4725 0333
Fax +420 5 4725 0444
Mobile +420 6 0278 4077

E-Mail:
info-cz@schneeberger.com

SPAIN AND PORTUGAL

Phone +34 6 4991 9740
Fax +34 9 4687 0973
Mobile +34 6 4991 9740

E-Mail:
info-es@schneeberger.com

10.1009/-04/205/e/0.31/SRO/Eg/Printed in Switzerland. Subject to technical changes

SCHNEEBERGER
LINEAR TECHNOLOGY

MINIRAIL

The Miniature Guideway

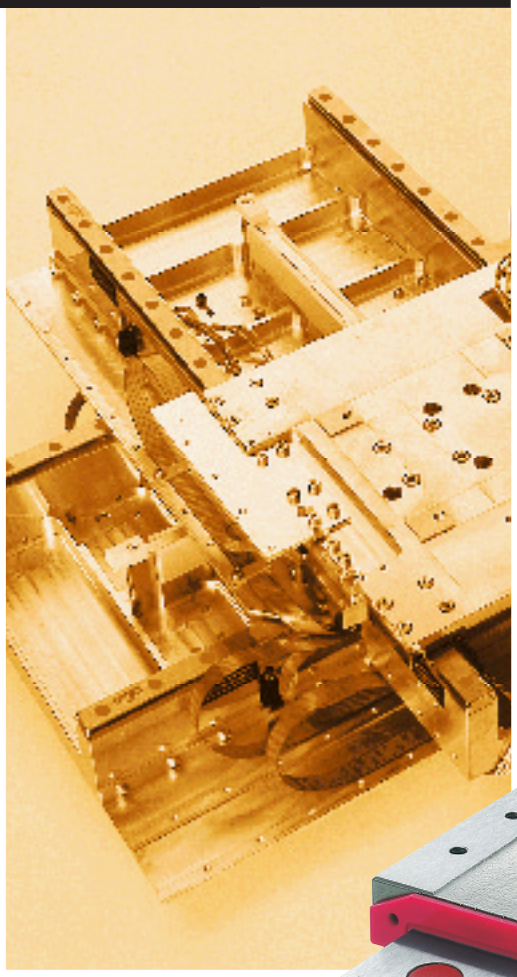

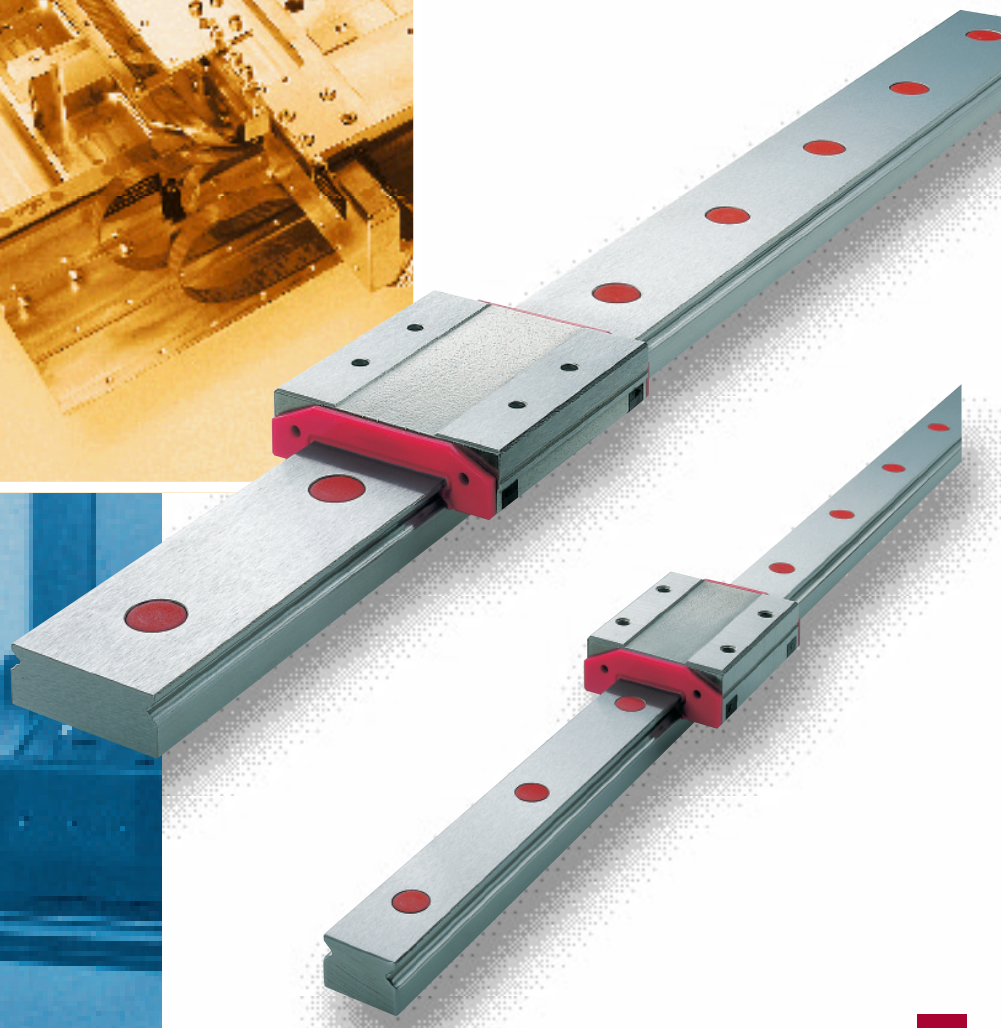

NEW
wide ranges included

SCHNEEBERGER
LINEAR TECHNOLOGY

Table of Contents

1 Product Overview
1.1 MINIRAIL 2

2 Technical Data
2.1 Accuracy classes 8
2.2 Running accuracy Δ 8
2.3 Preload classes V0, V1 8
2.4 Rail information 9
2.5 Lubrication 10
2.6 General data 11

3 Dimension tables and ordering information
3.1 Dimension table, loading capacities MINIRAIL sizes 7, 9, 12, 15 12
3.2 Dimension table, loading capacities MINIRAIL sizes 14, 18, 24, 42 13
3.3 Accessories 14
3.4 Ordering information MN 15

4 Dimensioning
4.1 Dynamic loading capacity C 16

5 Mounting guidelines
5.1 Tightening torques for rails and carriages 17
5.2 Configuration of the lateral location sides 18
5.3 Configuration of assembly surfaces 18
5.4 Geometrical and position accuracy of the support surfaces 19
5.5 Parallelism tolerances of the locating surfaces 19
5.6 Various 20

MINIRAIL - the range of high-precision guideways

MINIRAIL – The 2-row miniature ball and rail guideway with high stability
A quality product in accordance with the latest technological designs, consisting of a minimum number of components.

MINIRAIL
in 8 sizes according to DIN standards
All installation and connection dimensions are in accordance with the DIN standard 645-2. The type designation of the individual products refers to the rail width in mm (e.g., MN 14 = rail width 14 mm).
The design of the running tracks is based on the proprietary SCHNEEBERGER know-how. An interchangeability of rail and carriages exists within the MINIRAIL ranges.

MINIRAIL Wide Sizes

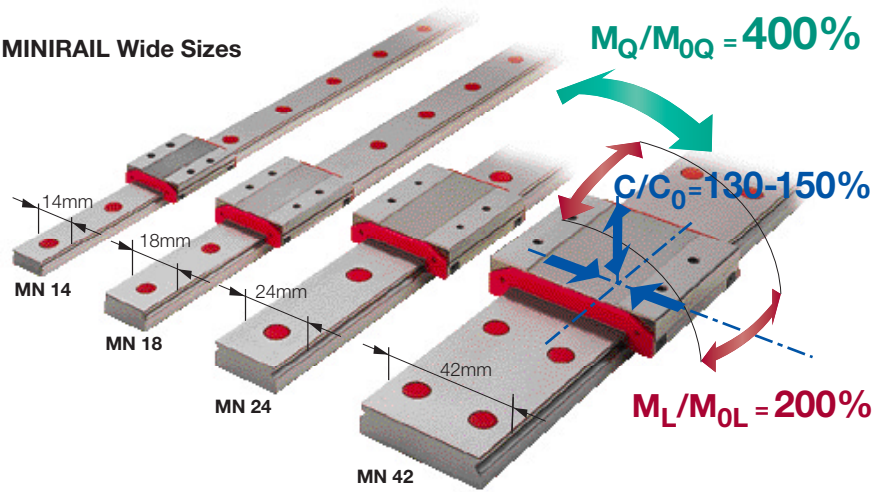

MINIRAIL Standard Sizes

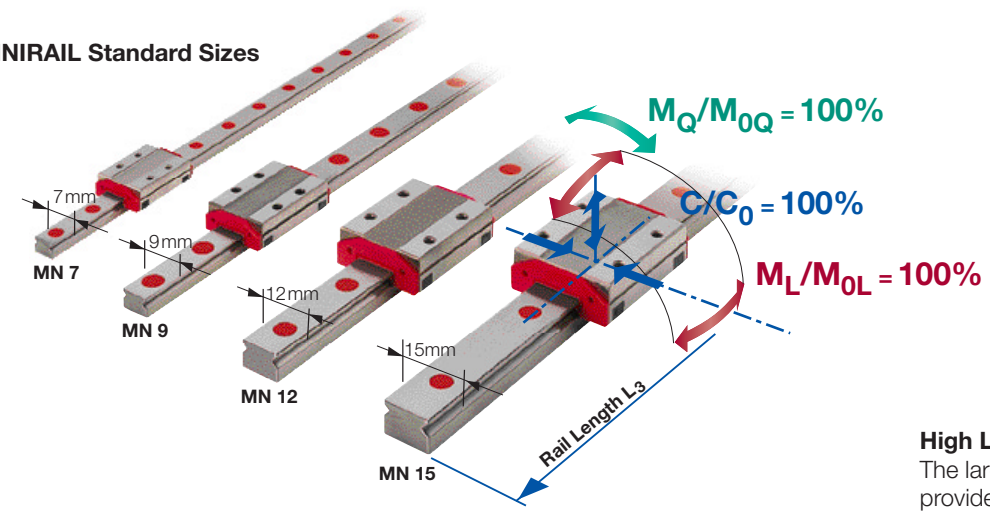

Rail Length L_3
Our manufacturing know-how makes it possible to produce precision rail lengths up to 980 mm, depending on the rail size. For custom applications, intermediate lengths are available.

High Load Values and Torque
The large number of load-bearing balls provide the carriages with high permissible load values and torque. The MINIRAIL wide series in essence differ in the permissible transverse torque M_Q, which is up to 400% higher than that of the standard sizes.

Load-bearing values in accordance with the calculation DIN 636, part 2:
Co = static load
C = dynamic load (100 km)
Mo = static torque
M = dynamic torque (100 km)

MINIRAIL in two accuracy grades: G3 and G1

Depending on the requirements of your application, you have the choice of two accuracy grades: precision G3 and high-precision G1.

Tolerances:

	A / B2	ΔA / ΔB2
G1, high-precision	± 10 µm	7 µm
G3, precision	± 20 µm	15 µm

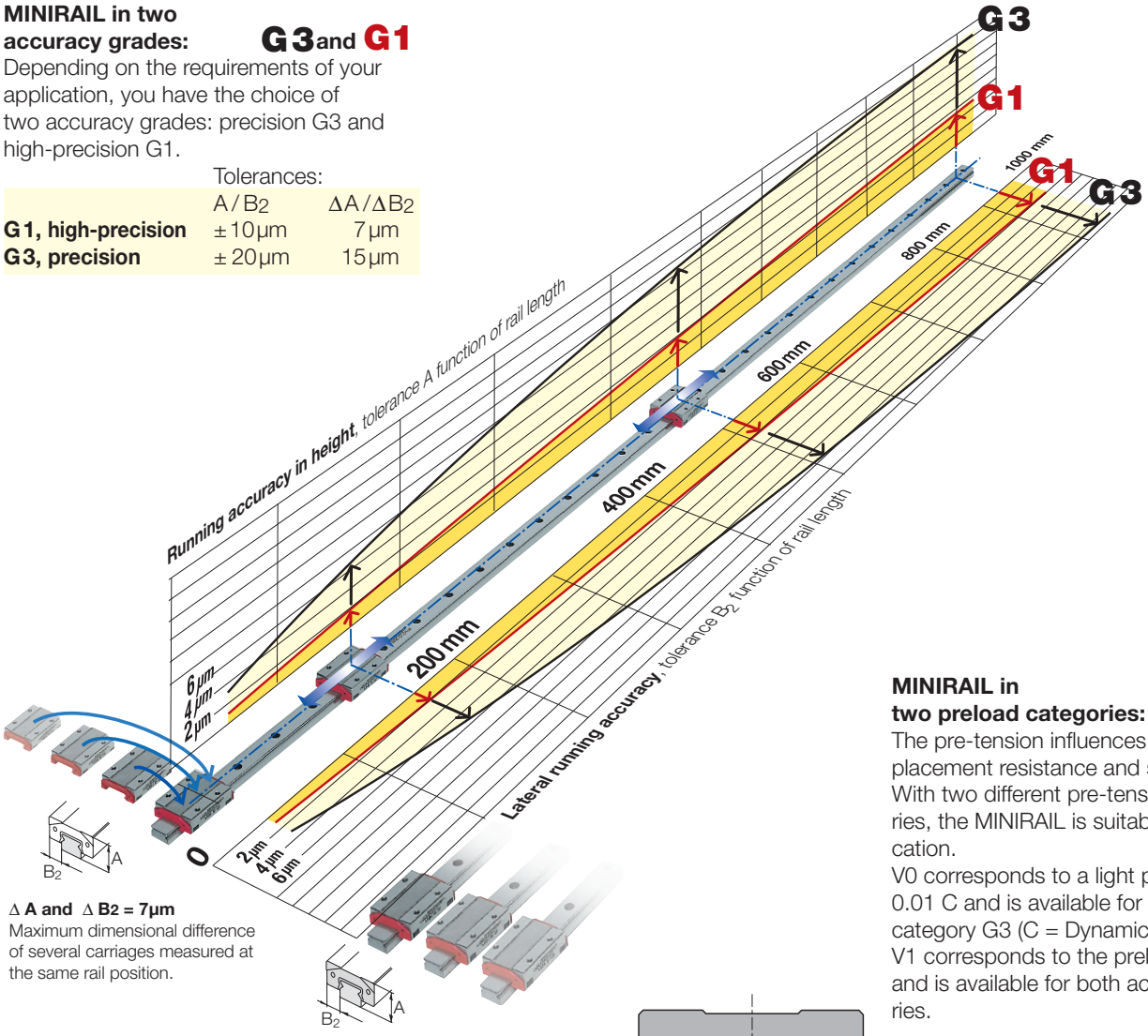

Δ A and Δ B2 = 7µm
Maximum dimensional difference of several carriages measured at the same rail position.

A and B2 = ±10µm
Maximum dimensional difference measured on several MINIRAIL-systems.

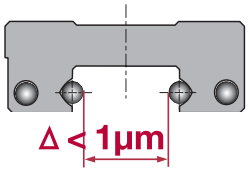

µm - Accuracy
Our manufacturing control of this precise dimension is decisive for the complete interchangeability of the rails from assembly to assembly and rail to rail.

MINIRAIL in two preload categories: V0 and V1

The pre-tension influences the rigidity, displacement resistance and service lifetime. With two different pre-tensioning categories, the MINIRAIL is suitable for your application.
V0 corresponds to a light preload of up to 0.01 C and is available for the accuracy category G3 (C = Dynamic load).
V1 corresponds to the preload 0 to 0.03 C and is available for both accuracy categories.

MINIRAIL
Carriage interchangeability guarantee

The carriages are manufactured with high precision and are completely interchangeable. This makes a high degree of flexibility with respect to operations planning, stocking and assembly. As a result of the interchangeability, additional carriages can be installed onto an existing rail.

MINIRAIL – Perfection to the last detail for the latest requirements of the technology: • High accelerations of up to 300 m/s^2 • Incomparable

High acceleration values call for new solutions
In the case of gearwheel or ball screw drives, the maximum speed was limited by the design of the linear guideway. In newer designs, the guideway is subjected to very high stresses as a result of the use of linear motors - the acceleration values have highly increased. Schneeberger's recirculation element (shown here) has been developed to withstand high stresses from demanding applications.

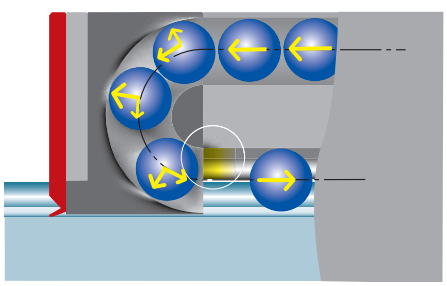

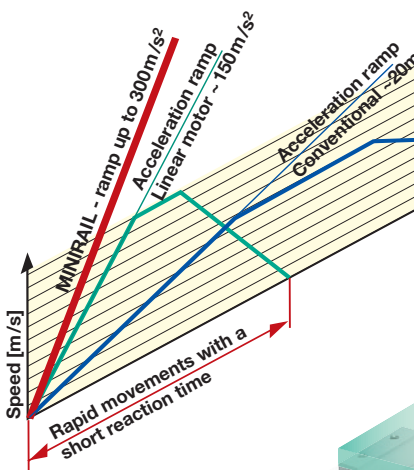

Optimized Material Selection
The ball recirculation devices are made out of a plastic material, which is capable of being subjected to high loads. The smooth running track surfaces are perfectly capable of accommodating the enormous centrifugal forces of the balls.

The Ball Entry Zone - A Decisive Point
The precise fine grinding of the ball entry position on the running track is crucial to the operational quietness and service life, especially in the case of carriages with preload. Here we have indeed produced our best work!

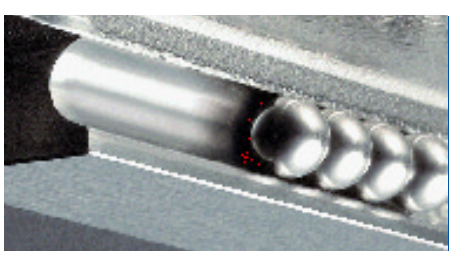

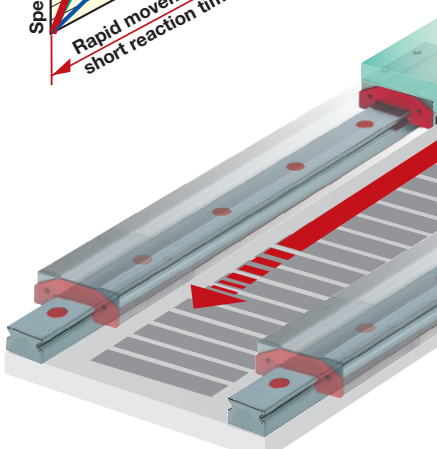

Direct Lubrication
Two lubrication bores in each front plates allow the direct lubrication of the ball recirculation system. The initial lubrication is applied at Schneeberger.

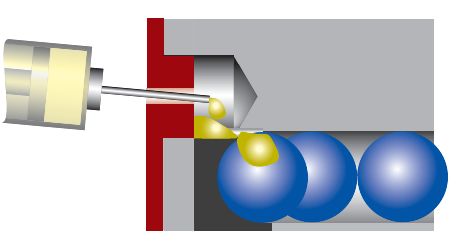

smoothness • Durable precision

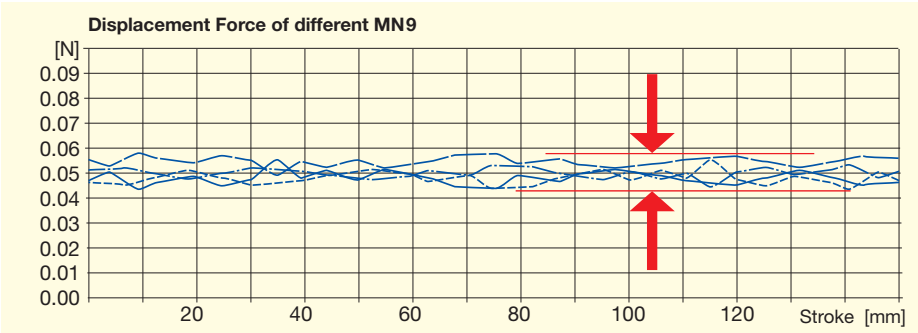

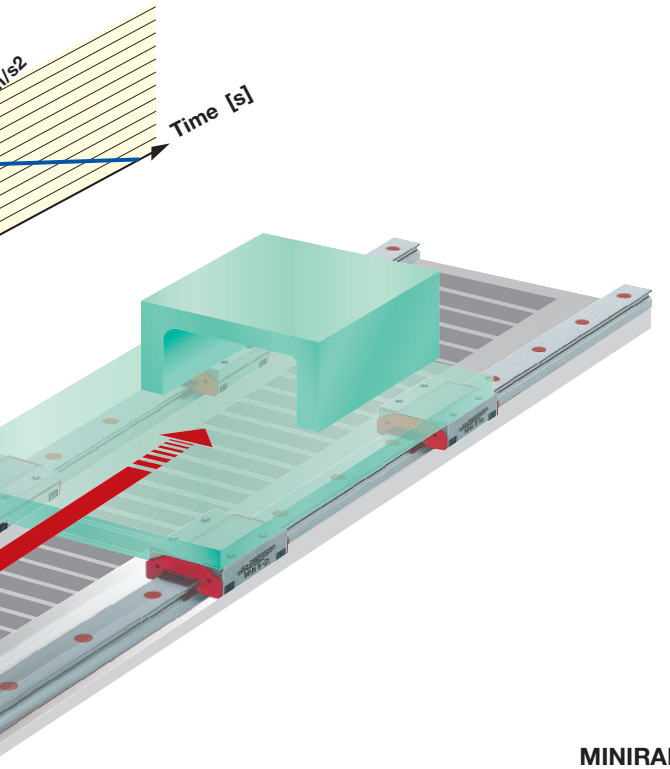

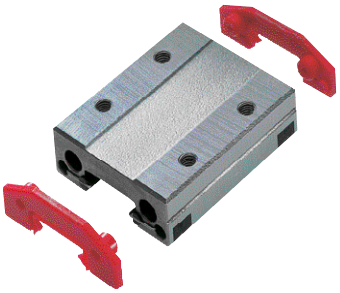

Measurable Smoothness and Displacement Force
Running quietness and displacement force are important characteristic features of the guideway. The MINIRAIL carriages are interchangeable and the values from carriage to carriage must only vary to the least possible degree.

Carriages without Front Plates
Should the protective - and wiping function of the front plates not be required, the front plates can be removed easily. As a result, the displacement resistance is reduced significantly.

Carefully Contoured Front Plates
To obtain quietness and extended life, rail and carriage assemblies require clean running surfaces - even under unfavorable conditions. Our MINIRAIL carriages are equipped with rail-wiping, contoured front plates.

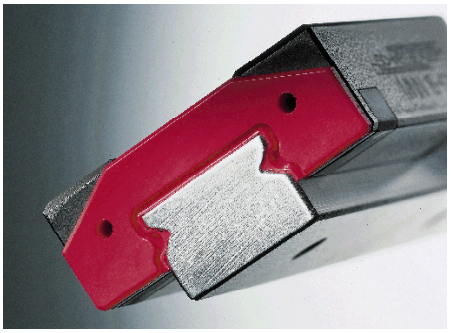

MINIRAIL rails and carriages
All rails and carriages are manufactured from corrosion-resistant, through-hardened steel and are suitable for utilization in the most diverse applications, such as clean room conditions.

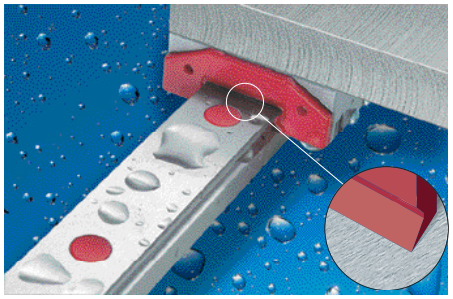

SCHNEEBERGER - MINIRAIL is synonymous for reliability, competence and perfection in

Installed and Lubricated for Clean-Room Conditions
Every single MINIRAIL - component is shipped clean. The complete assembly and the packaging are carried out in a clean-room environment. The lubrication is suitable for clean-room conditions. Our standard plastic packaging keeps the carriages and rails absolutely clean during shipping and storage.

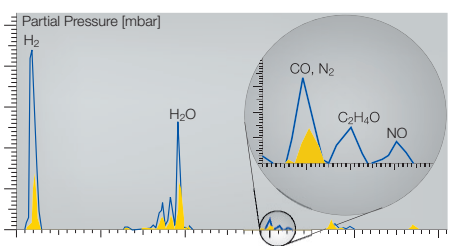

Plastic Materials suitable for High-Vacuum Conditions
Laboratory test confirmed that elements identified, such as water (H_2O) and hydrogen (H_2) are not trapped in the MINIRAL carriage body.

Perfection with Plastic Plugs
Plastic plugs in the rail mounting holes prevent the accumulation of any dirt.

Protective Packaging
Carriages and rails are packed carefully and ready for installation.

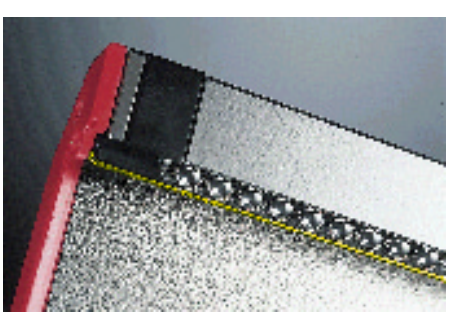

Ball Retention Device for Easy Handling
If a carriage is removed from the rail or is being prepared for installation, the balls are always retained in the carriage by a special ball retaining device. This makes handling significantly easier and is a prerequisite for quickly changing the carriages.

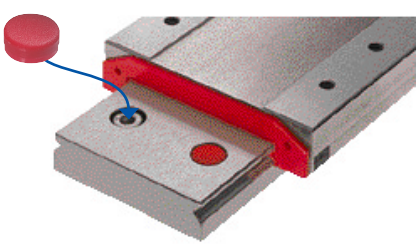

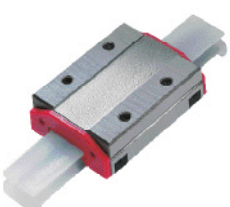

MINIRAIL - Protective Rail
MINIRAIL - carriages are shipped on a protective rail, in order to prevent any impairment by dirt or debris.

all types of designs - all over the world.

Competent Application Engineering for a Longer Service Life
During your design phase, Schneeberger's competent engineers will assist you in the selection of a suitable product. With the optimal product selection and installation, the running characteristics of the MINIRAIL become effective and provide a long service life.

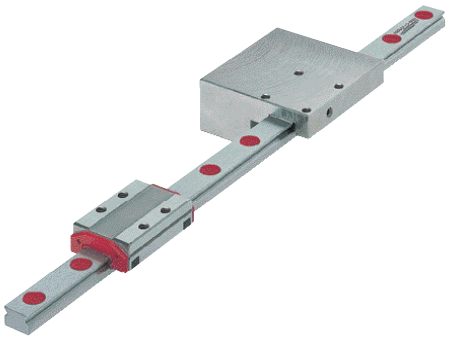

Clamping Element for Safety Purposes
The clamping element has been developed especially for Schneeberger's MINIRAIL. In normal operation, the clamping element is maintained in an open position by compressed air, and in the case of an electric power failure, the spring-force blocks all movement for operational safety.

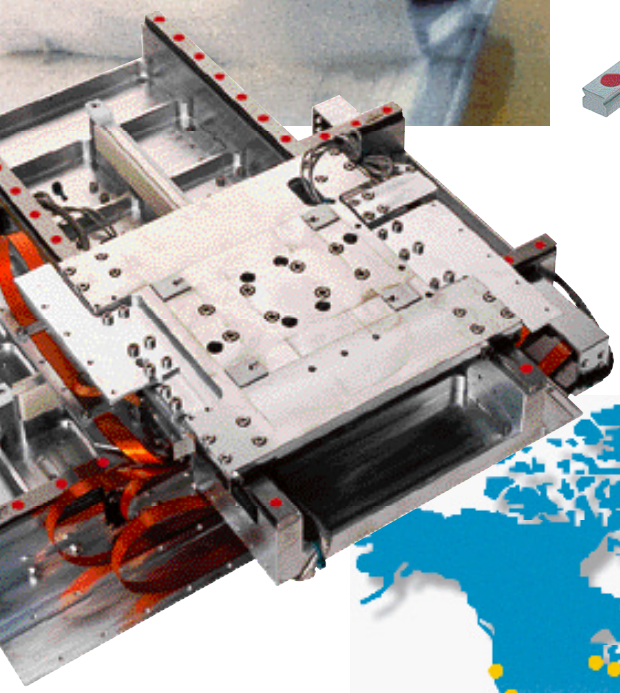

SCHNEEBERGER – World-wide
With an extensive network of SCHNEEBERGER branch companies and exclusive representatives, we keep in contact with our customers all over the world.
Visit us at:
www.schneeberger.com

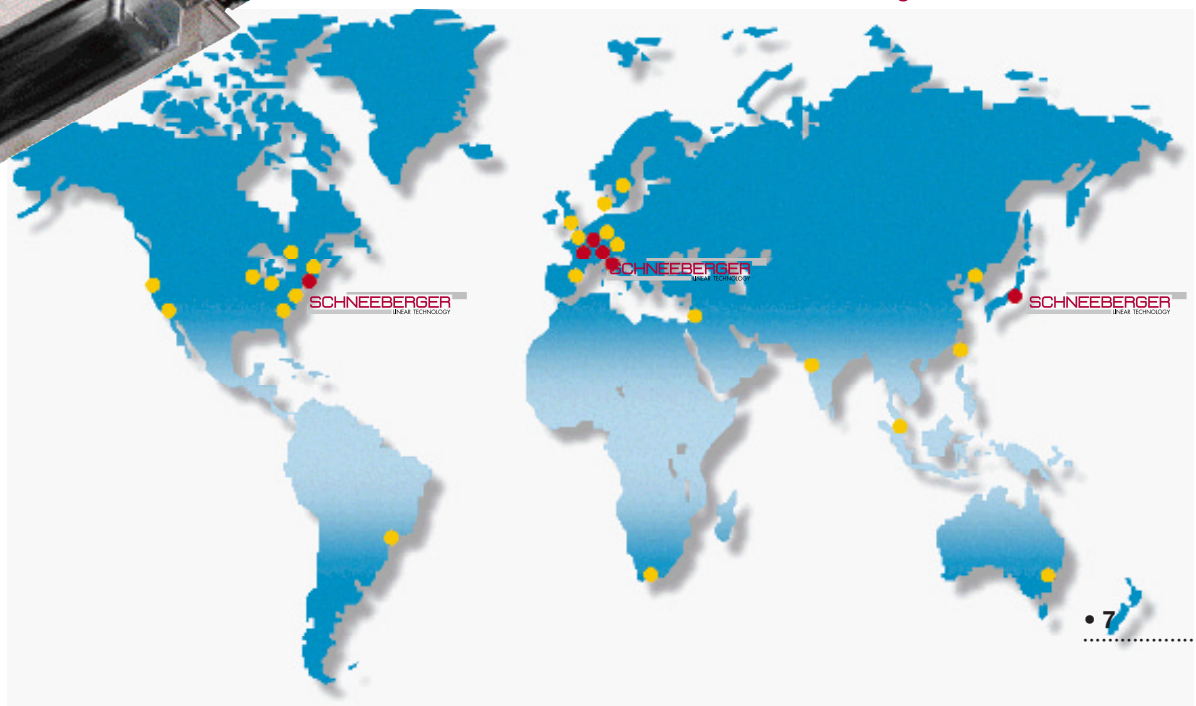

2 Technical Data

2.1 Accuracy classes

The MINIRAIL guideways are available in two accuracy classes.

Accuracy class	Tolerances [1] A and B_2	[2] Δ A and $ΔB_2$
G1	± 10 µm	7 µm
G3	± 20 µm	15 µm

[1] Measuring referring to the center of the carriage

[2] Dimension differences between two or more carriages measured at the middle of each carriage (mean value of both supports) and at the same rail position

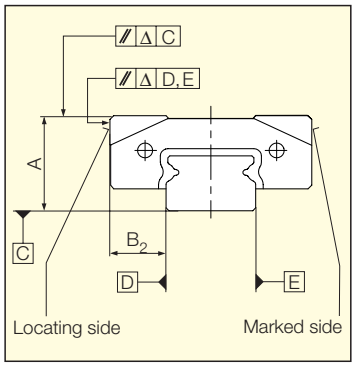

2.2 Running accuracy

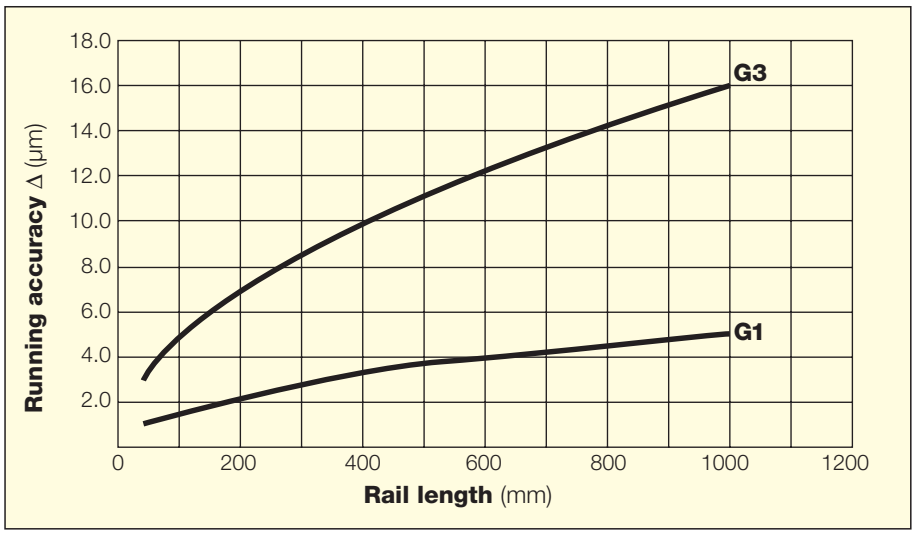

2.3 Preload classes V0, V1

Preloading increases the rigidity of the guideway but also affects operational life and increases translation resistance. The MINIRAIL system is available in two preload classes to address specific application requirements. The rail up to determines the preload classes.

Preload class	Preload	Accuracy class
V0	near clearance to 0.01 · C	G3
V1	0 to 0.03 · C	G1, G3

C = Dynamic loading capacity (see chapter 3.1 and 3.2)

2.4 Rail information

Rail lengths

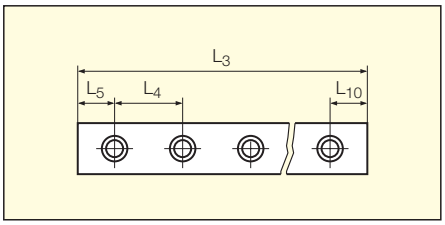

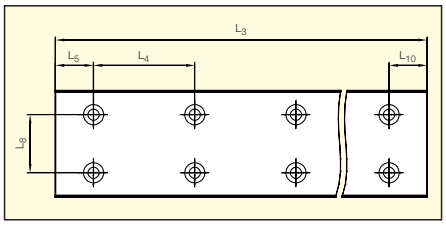

Standard rail lengths L_3 (length in mm)

Size	L_4	L_5, L_{10}	L_8	L_3	Max L_3
7	15	5	–	40, 55, 70, 85, …, 355	355
9	20	7.5	–	55, 75, 95, 115, …, 695	695
12	25	10	–	70, 95, 120, 145, …, 945	945
15	40	15	–	70, 110, 150, 190, …, 950	950
14	30	10	–	80, 110, 140, 170, …, 380	380
18	30	10	–	80, 110, 140, 170, …, 980	980
24	40	15	–	110, 150, 190, 230, …, 950	950
42	40	15	23	110. 150. 190, 230, …, 950	950

Custom rail lengths

Other rail lengths are available up to the maximum rail lengths above and are calculated according to the following formula:

$L_3 = (n-1) \bullet L_4 + L_5 + L_{10}$ n = 3, 4, 5… (n = number of attaching holes)

The following minimum and maximum values should be maintained for the starting hole pitch L_5 and the end hole pitch L_{10}.

Minimum and maximum starting and end hole pitch L_5, L_{10}
(lengths in mm)

Size	7	9	12	15	14	18	24	42
L_5, L_{10} minimum	4	5	5	5	5	5	6	6
L_5, L_{10} maximum	11	15	20	35	25	25	34	34

Tolerances for rail lengths and attaching holes

The position tolerance of the attaching holes and the length tolerance is:

Rail	L_3, $X_n \leq 300$ mm	L_3, $X_n > 300$ mm
t (mm)	0.3	$0.001 \cdot X_n$
L_3	± 0.3	$\pm 0.001 \cdot L_3$

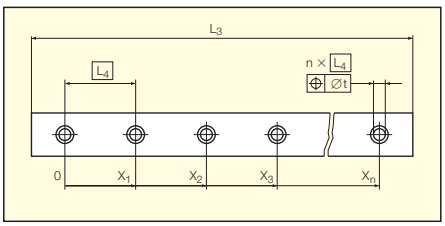

2.5 Lubrication

The front plates include two lubrication holes to allow independent lubrication for the right and left side of the carriage.
This ensures that all tracks of the carriage are provided with lubricant, in all installation orientations.

At delivery the carriages are slightly oiled. The required re-lubrication intervals as well as a lubrication prior to operation depend on the application and the operating conditions.
For lubrication with oil, SCHNEEBERGER recommends mineral oil CLP (DIN 51517) or HLP (DIN 51524) in the viscosity range of ISO VG32 to ISO VG150 in accordance with DIN 51519.
For lubrication with grease, SCHNEEBERGER recommends grease KP2K or KP1K in accordance with DIN 51825.

A re-lubrication set with an appropriate oil can be ordered at SCHNEEBERGER with the ordering code MNW.

Basic lubrication with grease

Initial lubrication and re-lubrication according to table.

Basic lubrication with grease per carriage in cm³							
MNN 7	**MNN 9**	**MNN 12**	**MNN 15**	**MNN 14**	**MNN 18**	**MNN 24**	**MNN 42**
0.04	0.09	0.15	0.25	0.05	0.11	0.20	0.33

Basic lubrication with oil

Initial lubrication and re-lubrication until oil escapes.

Re-lubrication:

Recommended values:
The basic lubrication is sufficient for 3000 km of travel, based on the follwoing factors:
load ratio C/P = 10
speed = 1 m/s
stroke = 150 mm

2.6 General data

Permissible speeds and accelerations

General applications under normal operating conditions:

Speeds up to	5 m/s
Accelerations up to	300 m/s^2

Permissible operating temperatures

MINIRAIL guideways can be used at operating temperatures between -40°C and +80°C. Short term temperatures up to +120°C are permissible.

Materials

All steel parts are made from through hardened stainless steel. Plastic components are injection-molded using POM and TPE.

3.1 Dimension table, loading capacities Sizes 7, 9, 12, 15

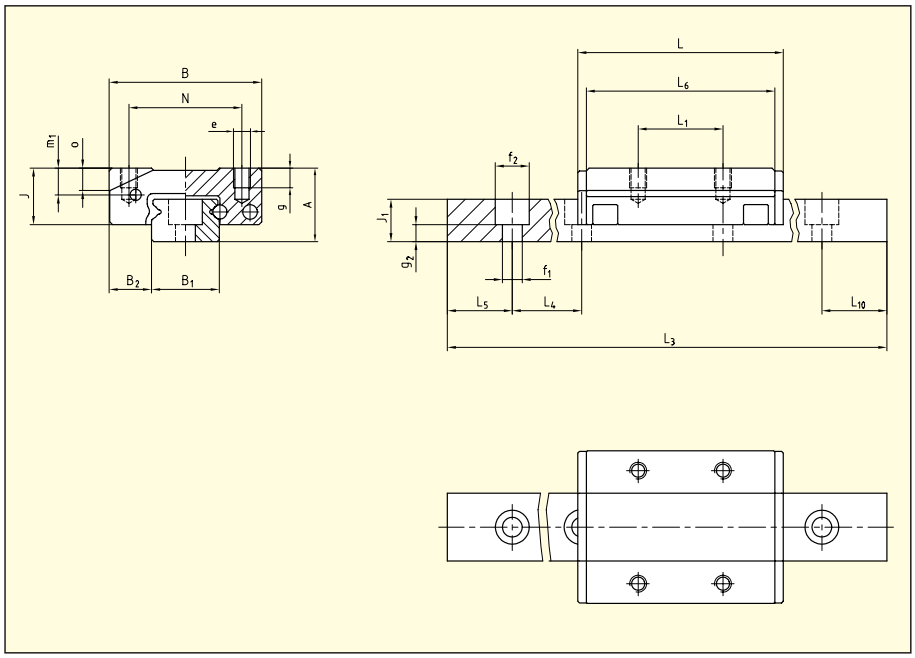

Type	Dimensions (mm) A	B	B_1	B_2	J	J_1	L	L_1	L_4	L_5/ L_{10}	L_6	N	e	f_1	f_2	g	g_2	m_1	o
MN 7	8	17	7	5	6.5	4.5	24.6	8	15	5	22.1	12	M2	2.4	4.2	2.5	2.2	3.1	2.5
MN 9	10	20	9	5.5	8	5.5	32	10	20	7.5	29	15	M3	3.5	6	3	2	3.8	3.1
MN 12	13	27	12	7.5	10	7.5	36.4	15	25	10	33.4	20	M3	3.5	6	3.5	3	4.75	3.9
MN 15	16	32	15	8.5	12	9.5	43.7	20	40	15	40.7	25	M3	3.5	6	4	5	5.55	4.9

Type	Loading capacities C_0 (N)	C (N)	Moments M_{0Q} (Nm)	M_{0L} (Nm)	M_Q (Nm)	M_L (Nm)	Weights Carriage (g)	Rail (g/m)
MN 7	1560	925	5.6	4.3	3.3	2.5	12.8	216.3
MN 9	2770	1690	12.9	10.2	7.9	6.2	23.9	308.8
MN 12	3900	2510	23.8	16.3	15.3	10.4	47.4	597.9
MN 15	5620	3680	42.7	28.1	27.9	18.4	81.4	995.5

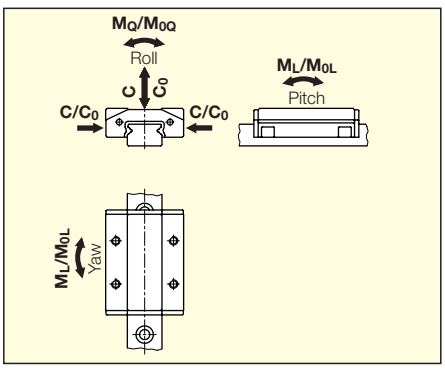

Loading capacities are calculated values, based on DIN 636-2
C_0 = static loading capacity
C = dynamic loading capacity (100 km)
M_0 = static moment
M = dynamic moment (100 km)

3.2 Dimension table, loading capacities Sizes 14, 18, 24, 42

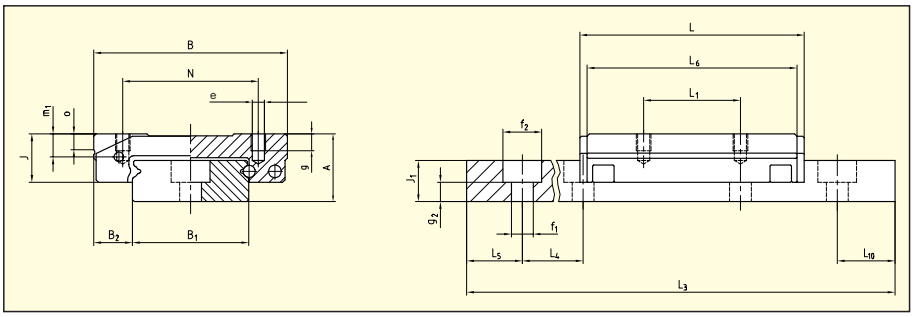

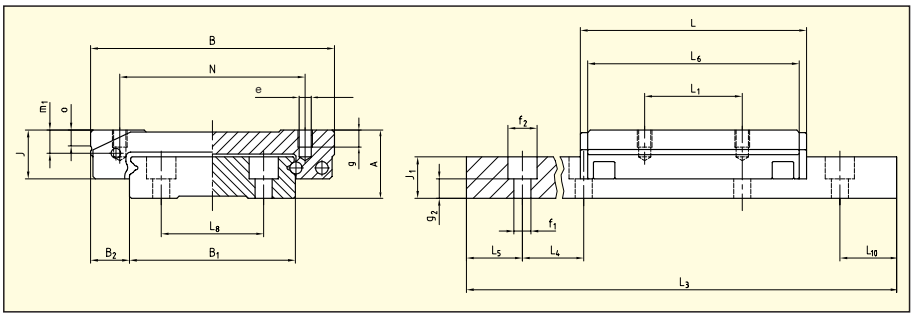

Type	Dimensions (mm) A	B	B_1	B_2	J	J_1	L	L_1	L_4	L_5/ L_{10}	L_6	L_8	N	e	f_1	f_2	g	g_2	m_1	o
MN 14	9	25	14	5.5	6.8	5.2	32.1	10	30	10	29.6	–	19	M3	3.5	6	2.8	2	3.3	2.2
MN 18	12	30	18	6	8.5	7	40	12	30	10	37	–	21	M3	3.5	6	3	2.5	4.3	3.1
MN 24	14	40	24	8	10	8.5	46.4	15	40	15	43.4	–	28	M3	4.5	8	3.5	4	4.75	3.9
MN 42	16	60	42	9	12	9.5	55.7	20	40	15	52.7	23	45	M4	4.5	8	4.5	5	5.5	4.9

Type	Loading capacities C_0 (N)	C (N)	Moments M_{0Q} (Nm)	M_{0L} (Nm)	M_Q (Nm)	M_L (Nm)	Weights Carriage (g)	Rail (g/m)
MN 14	2340	1230	16.6	9.3	8.7	4.9	25	518.3
MN 18	3880	2140	35.5	19.4	19.6	10.7	47	914.6
MN 24	5630	3240	68.2	32.9	39.2	18.9	84	1473.0
MN 42	8110	4750	171.2	56.8	100.3	33.3	169	2828.4

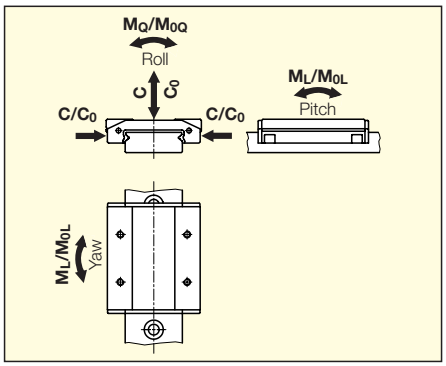

Loading capacities are calculated values, based on DIN 636-2
C_0 = static loading capacity
C = dynamic loading capacity (100 km)
M_0 = static moment
M = dynamic moment (100 km)

3.3 **Accessories –** must be ordered separately

Plastic plugs MNK

Plastic plugs can be used to close the rail attachment holes.

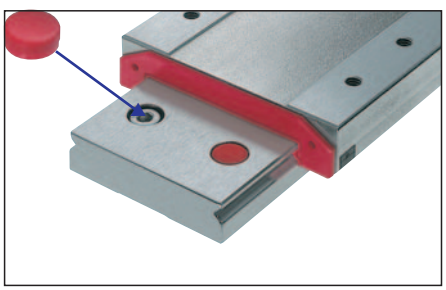

MINIRAIL Type	Plastic plugs Type	Plastic plugs can be combined with attaching screws of type DIN 912	DIN 7984	ISO 7380
MN 7	MNK 4	–	–	x
MN 9	MNK 6	–	x	x
MN 12	MNK 6	x	x	x
MN 15	MNK 6	x	x	x
MN 14	MNK 6	–	x	x
MN 18	MNK 6	x	x	x
MN 24	MNK 8	–	x	x
MN 42	MNK 8	–	x	x

3.4 Ordering information MINIRAIL

The MINIRAIL carriage and guideway must be ordered as separate items.

Carriage MINIRAIL MNN

		__	MNN	9	- G1
Quantity					
Carriage type	**MNN**				
Size	**7, 9, 12, 15, 14, 18, 24, 42**				
Accuracy class	**G1, G3**				

Guideway MINIRAIL MN

		__	MN	9	-155	-7.5	-7.5	- G1	-V1
Quantity									
Guideway type	**MN**								
Size	**7, 9, 12, 15, 14, 18, 24, 42**								
Rail length	L_3 (in mm)								
Starting hole pitch	L_5 (in mm)*								
End hole pitch	L_{10} (in mm)*								
Accuracy class	**G1, G3**								
Preload class	**V0, V1**								

* Indicate only if special pitch

Accessories MINIRAIL MN

Re-lubrication set

		__	MNW
Quantity			
Type	**MNW**		

Plastic plugs MNK

		__	MNK	6
Quantity				
Type	**MNK**			
Size	**4, 6, 8**			

4 Dimensioning

4.1 Dynamic loading capacity C

The loading capacity values for anti-friction guideways are based on the principles specified by the ISO for calculation of rolling-contact bearings (DIN ISO 281).

Dynamic loading capacity is the loading which results in a nominal operational life corresponding to a translation distance of 100 000 m (100 km) provided that the loading due to mass and direction is unchanged and the line of influence acts vertically on the rolling-contact bearing unit.

Comparison of loading

Other suppliers often indicate their loading capacities for a translation distance of 50 000 m (50 km). These values according to JIS standard are above the values according to DIN ISO. The recalculation of the loading capacities ist done as follows:

$$C_{50} = 1.26 \cdot C_{100}$$

Operational life calculation

The nominal calculated operational life L for the equivalent force P and a dynamic loading capacity C is:

$$L = (C/P)^3 \cdot 10^5 \text{ m}$$

L = nominal life (m)

Operational life calculation in hours

$$L_h = \frac{L}{2 \cdot s \cdot n \cdot 60} = \frac{L}{60 \cdot v_m}$$

L_h = nominal life (h)
s = stroke length (m)
n = stroke frequency (min^{-1})
v_m = average traversing speed (m/min)

SCHNEEBERGER LINEAR TECHNOLOGY

5.1 Tightening torques for rails and carriages

Tightening torques for fastening screws DIN 912, μ 0,125 (12,9) and DIN 912, μ 0,2 (A2-70)

Strength-class	**max. tightening torques** [Nm] M2	M3	M4
12.9	0.6	2.1	5.0
A2–70	0.3	1.1	2.6

Notes

- When the screws are greased with grease containing MoS_2 the friction coefficient μ can be reduced by as much as half. As the tightening torques required to reach the maximum permissible tightening force depend on the friction coefficient, they must be reduced accordingly. The values can be obtained from the screw manufacturer's information or from the specialist literature. If necessary, carry out tests to determine the actual friction coefficient.
- Refer to the screw manufacturer's information. This is always binding.

5.2 Configuration of the lateral locating sides

The corners between the support and locating surfaces of the surrounding structure are normally provided with a relief groove. However, if no relief groove is provided, then the dimensions tabulated below must be maintained.

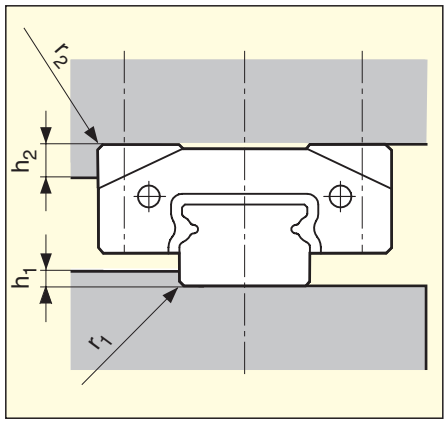

Size	h_1	$r_{1\ max}$	$r_{2\ max}$	h_2
7	1.2	0.2	0.3	2.5
9	1.5	0.3	0.4	3
12	2.5	0.4	0.4	4
15	3.5	0.5	0.5	5
14	1.8	0.2	0.4	2
18	3	0.3	0.5	3
24	3.5	0.4	0.5	4
42	3.5	0.5	0.6	5

5.3 Configuration of assembly surfaces

MINIRAIL advantages can only be achieved when mounted to a rigid, accurately machined structure.

The surface quality of the supporting structure has no direct influence on the operational and run-out behavior. A roughness average ratio of R_a 0.4 to 1.6 µm is recommended for support and locating surfaces.

Inaccuracies of the attachment surfaces are partially compensated by the elastic deformation of the MINIRAIL. However, they may affect overall accuracy, running behavior and operational life.

5.4 Geometrical and position accuracy of the support surfaces

Permissible height deviation (use values in mm for the calculation).

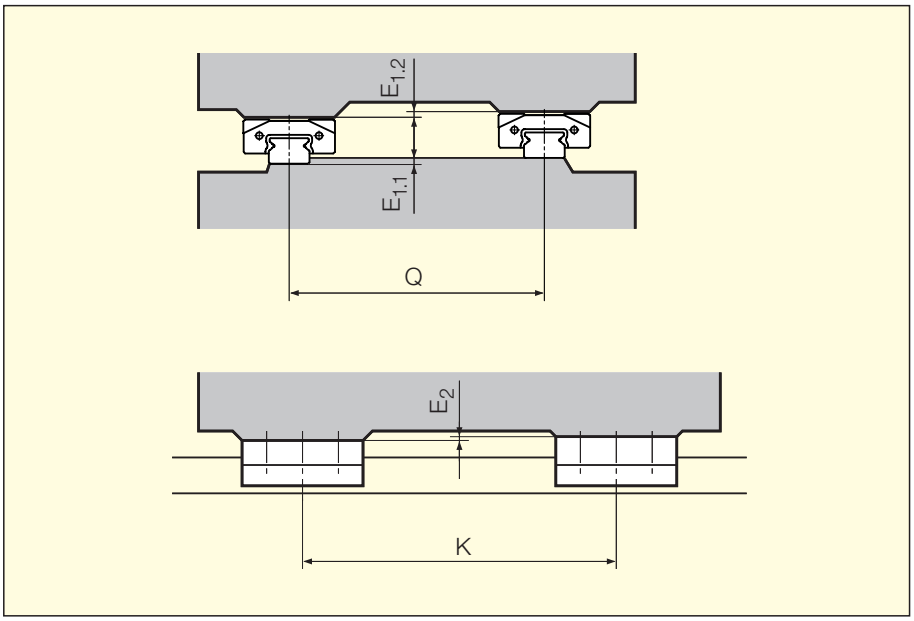

	MNN	V0	V1
$E_1 = E_{1.1} + E_{1.2}$	7, 9, 12, 15	0.00025 Q	0.00015 Q
E_2	7, 9, 12, 15	0.00005 K	0.00005 K
$E_1 = E_{1.1} + E_{1.2}$	14, 18, 24, 42	0.00013 Q	0.00008 Q
E_2	14, 18, 24, 42	0.00004 K	0.00004 K

5.5 Parallelism tolerances of the locating surfaces

Permissible tolerances for the parallelism.

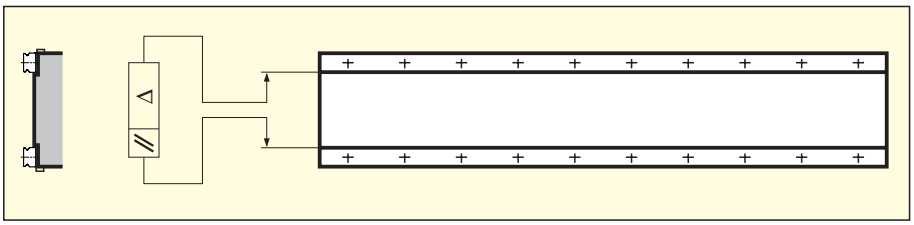

Tolerances for preload class (mm))				
	7 / 14	**9 / 18**	**12 / 24**	**15 / 42**
V0	0.003	0.005	0.008	0.01
V1	0.002	0.003	0.004	0.005

5.6 Various

Mounting instructions

The installation of the MINIRAIL guideways is described in detail in the separate
- **Mounting Instructions MINIRAIL** and can be downloaded from **www.schneeberger.com** at menu SERVICES or be ordered from SCHNEEBERGER.

As delivered condition

The SCHNEEBERGER MINIRAIL guideways are delivered in protective packaging. The carriages are mounted on a plastic rail and slightly oiled for immediate operation.

Transportation and intermediate storage

The MINIRAIL guideways are highly precise components, which have to be treated with care. As a protection against damage, the following instructions should be followed:
- Always store and transport MINIRAIL guideways in their original packaging.
- Protect the guideways against impacts and dampness/humidity.

SWITZERLAND

W. Schneeberger AG
CH-4914 Roggwil/BE
Phone 062 918 41 11
Fax 062 918 41 00

E-Mail:
info-ch@schneeberger.com
www.schneeberger.com

GERMANY

Schneeberger GmbH
75339 Höfen/Enz
Phone 07081 782-0
Fax 07081 782-124

E-Mail:
info-d@schneeberger.com

ITALY

Schneeberger S.p.A
21021 Angera VA
Phone 0331 93 20 10
Fax 0331 93 16 55

E-Mail:
info-i@schneeberger.com

FRANCE

Schneeberger
Technique Linéaire SARL
91222 Brétigny-sur-Orge
Phone 01 69 88 50 00
Fax 01 60 84 96 02

E-Mail:
info-f@schneeberger.com

USA

Schneeberger Inc.
Bedford, MA 01730
Phone +1 781-271-0140
+1 800-854-6333
Fax +1 781-275-4749

E-Mail:
info-usa@schneeberger.com

SCHNEEBERGER
LINEAR TECHNOLOGY

MONORAIL

Profiled Linear Guideway

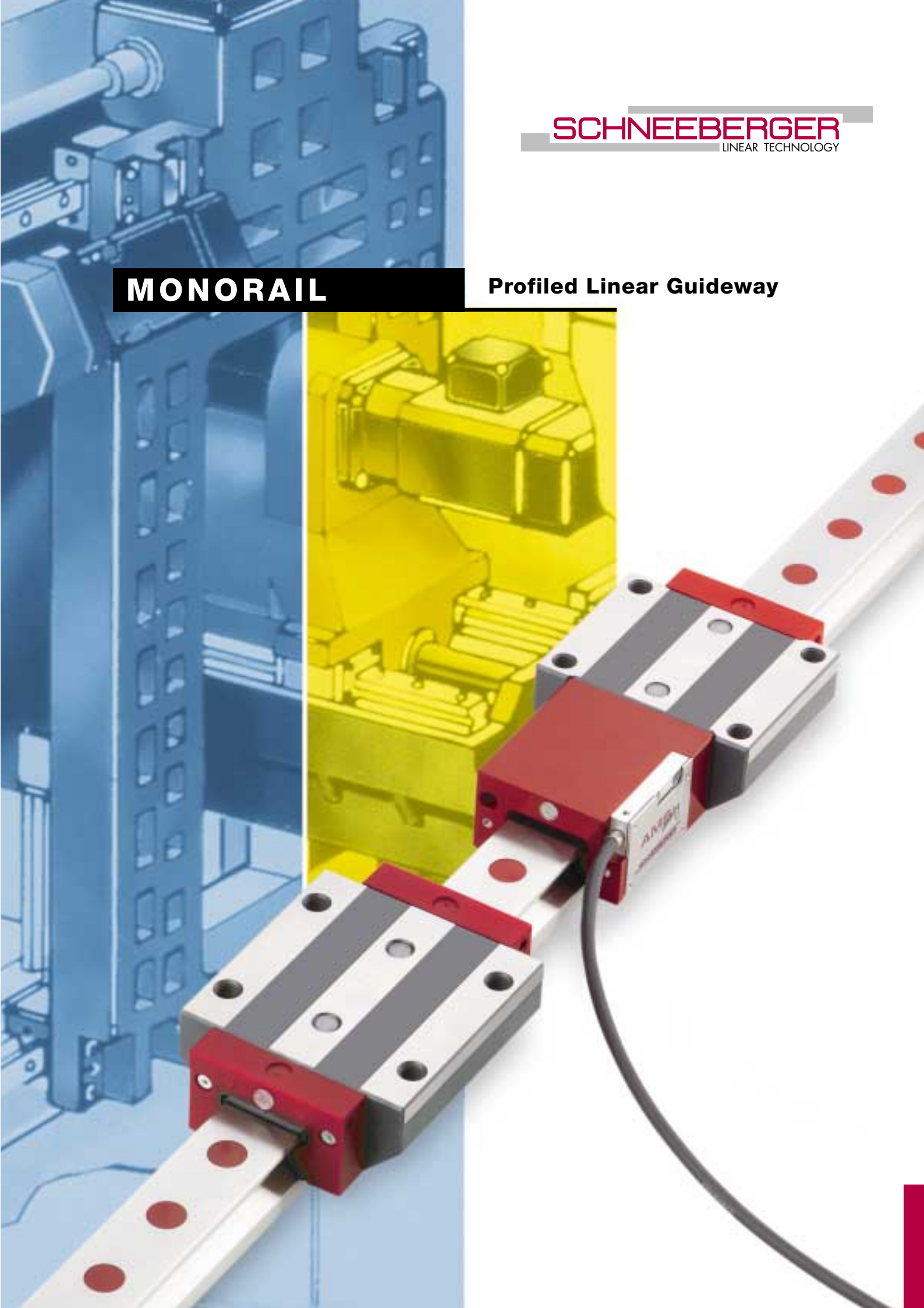

SCHNEEBERGER
LINEAR TECHNOLOGY

Table of Contents

1 Product Overview
1.1 Roller-MONORAIL MR . . . . • 4
1.2 Roller-MONORAIL MZ . . . . • 4
1.3 MONORAIL AMS . . . . • 6
1.4 Ball-MONORAIL BM . . . . • 6

2 Applications
2.1 MONORAIL MR in a 3-axis drilling and milling machine with integrated distance measuring system AMS . . . . • 10
2.2 MONORAIL MZ with integrated rack in a 3-axis profile/contour machining machine . . . . • 11
2.3 MONORAIL BM in a 4-axis drilling and milling center for printed circuit boards . . . . • 13

3 Technical data
3.1 Accuracy classes G0, G1, G2, G3 . . . . • 15
3.2 Dimensional tolerances . . . . • 15
3.3 Running accuracy Δ of the carriages on the rails . . . . • 15
3.4 Preload classes V1, V2, V3 . . . . • 16
3.5 Rails and carriage information . . . . • 16
3.6 Lubrication . . . . • 19
3.7 General data . . . . • 30

4 Roller-MONORAIL MR
4.1 Product features . . . . • 31
4.2 Dimension tables, loading capacities carriage types MRA, MRB . . . . • 34
4.3 Dimension tables, loading capacities carriage types MRC, MRD . . . . • 36
4.4 Rigidity . . . . • 38
4.5 Accessories . . . . • 40
4.6 Ordering information MR . . . . • 47

5 Roller-MONORAIL MZ
5.1 Product features . . . . • 51
5.2 Dimension table, loading capacities MONORAIL MZ with MRE . . . . • 52
5.3 Dimension table, loading capacities MONORAIL MR-X with MRC . . . . • 53
5.4 Accessories . . . . • 54
5.5 Ordering information MZ . . . . • 55

6 MONORAIL AMS
6.1 Product features . . . . • 57
6.2 Technical data . . . . • 60
6.3 Dimensions . . . . • 61
6.4 Ordering information MONORAIL MR with AMS . . . . • 62

7 Ball-MONORAIL BM
7.1 Product features . . . . . • 67
7.2 Dimension table, loading capacities carriage types BMA, BMB . . . . . • 70
7.3 Dimension table, loading capacities carriage types BMC, BMD . . . . . • 72
7.4 Rigidity . . . . . • 74
7.5 Accessories . . . . . • 76
7.6 Ordering information BM . . . . . • 82

8 Dimensioning
8.1 Basics . . . . . • 86
8.2 Operational life calculation . . . . . • 87
8.3 Calculation of static reliability factor . . . . . • 89
8.4 Calculation Program for the dimensioning of MONORAILs . . . . . • 90
8.5 MONORAIL AutoCAD® library . . . . . • 93

9 Design and installation
9.1 Installation methods . . . . . • 94
9.2 Configuration of the locating surfaces . . . . . • 95
9.3 Configuration of assembly surfaces . . . . . • 96
9.4 Attaching the rails . . . . . • 100
9.5 Permissible side force with no locating surfaces . . . . . • 101
9.6 Installation guidelines MONORAIL . . . . . • 102

10 Precautionary Measures . . . . . • 108

11 The SCHNEEBERGER-Group

SCHNEEBERGER
LINEAR TECHNOLOGY

1 Product Overview

2 Applications

3 Technical data

4 Roller-MONORAIL MR

5 Roller-MONORAIL MZ

6 MONORAIL AMS

7 Ball-MONORAIL BM

8 Dimensioning

9 Design and installation

10 Precautionary Measures

11 The SCHNEEBERGER-Group

1 Product Overview

1.1 Roller-MONORAIL MR

High rigidity, great dynamic and static load carrying capacity, outstanding running smoothness and the total enclosure of the carriage are the main features of the MONORAIL guideway. These properties result in higher machining rates while enhancing geometrical accuracy and surface quality of the machined workpieces. Our highly rigid MONORAIL provides improved vibration behavior, smaller vibration amplitudes and thus extends tool life.
SCHNEEBERGER has systematically applied its many years of experience in the design, production and use of roller-type anti-friction guideways in the development of the MONORAIL. Consequently the MONORAIL is a cost-effective anti-friction guideway which meets the challenge presented by modern machine design.

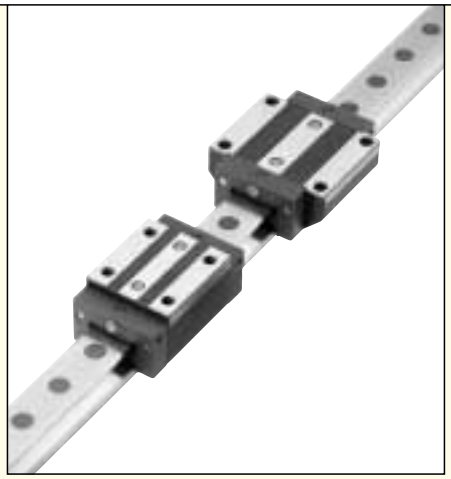

1.2 Roller-MONORAIL MZ

In the handling and automation industry increasing use is being made of linear guiding systems with additional features. The ever increasing cost pressure and quality demands on handling and automation systems in industrial applications are satisfied by MONORAIL MZ:

- Extremely simple dimensioning and design of the connecting structure.
- Logical mounting of the guiderail and carriage systems.
- Optimal load-carrying capacity and service life based on the well-known MONORAIL machine guideway.
- Minimum servicing and maintenance as the design of the MONORAIL is conceived for industrial usage.
- Life and speed uncompromisingly match the user's requirements.

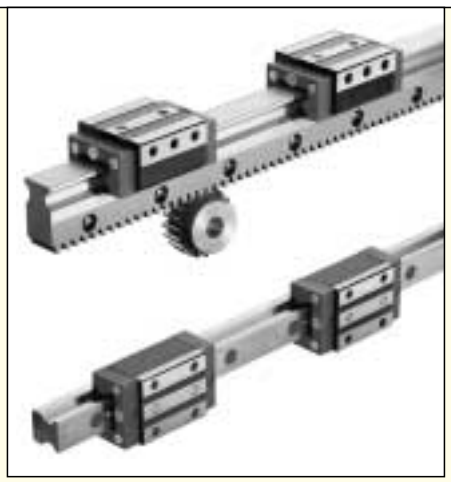

Types and Sizes	Accessories	Available options
MRA, MRB, MRC, MRD MR 25, 35, 45, 55, 65	• Rail cover strip MAB • Plastic plug MRK • Brass plug MRS • Steel plug MRZ **NEW** • Additional wiper ZCN, ZCV • Metal wiper ASM • Bellows FBM **NEW** • Lubrication Plate SPL • Assembly rail MRM **NEW** • Brakes and Clamps	• Hard-chromed rails • Hard-chromed carriages • Through hardened rails • Special hole spacings • Additional alignment bores and threads

Types and Sizes	Accessories	Available options
MRE MZ 25, 35	**NEW** • Additional wiper ZCN, ZCV • Metal wiper ASM **NEW** • Lubrication plate SPL • Assembly rail MRM • Standard pinion MZR	• Special rail length • Other carriage types • Helical rack version • Special tooth pitch • Rail without rack MO

1.3 MONORAIL AMS

SCHNEEBERGER develops and produces integrated distance measuring systems for MONORAIL roller guideways.
The technical level achieved sets standards with respect to economy, accuracy and reliability.
The AMS (Advanced Measuring System) represents the current technical state of the art and is primarily utilized in machine tools.
For various interfaces, powerful signal forming electronic systems are available from SCHNEEBERGER.

1.4 Ball-MONORAIL BM

Very good dynamic characteristics and high economy are the distinguishing features of the Schneeberger ball linear guideway MONORAIL BM. The novel design with few but optimally designed components, because the small number of transitions (joints) in the ball tracks makes outstanding running characteristics possible, which are distinguished by smooth running, little pulsation, low friction values and high travelling speeds. This robust linear guideway has a wide variety of possible applications and is an ideal complement to the roller guideway MR.

Types and Sizes	Accessories
AMS_A (analog) 25, 35, 45, 55, 65	• SMEa interpolation electronics • Extension/connection cables

Types and Sizes	Accessories	Available options
BMA, BMB, BMC, BMD BM 15, 20, 25, 30, 35, 45	• Rail cover strip BAB • Plastic plug BRK • Additional wipers ZBN/ZBV and ZBN-U/ZBV-U • Metal wipers ABM **NEW** • Bellows FBB **NEW** • Assembly rail MBM **NEW** • Brakes and Clamps	• Hard-chromed rails • Hard-chromed carriage • Special hole spacings • Additional alignment bores and threads

MONORAIL-Fields of Application and Operating Conditions

BM

MR

Preload classes		
V1	**V2**	**V3**
Operating conditions		
Low-friction guideways for uniform loads, slight vibrations	For high rigidity, medium, changing loads and vibrations	For highest rigidity, high impact/shock loads and vibrations, strongly changing, high loads and torques
Characteristics		

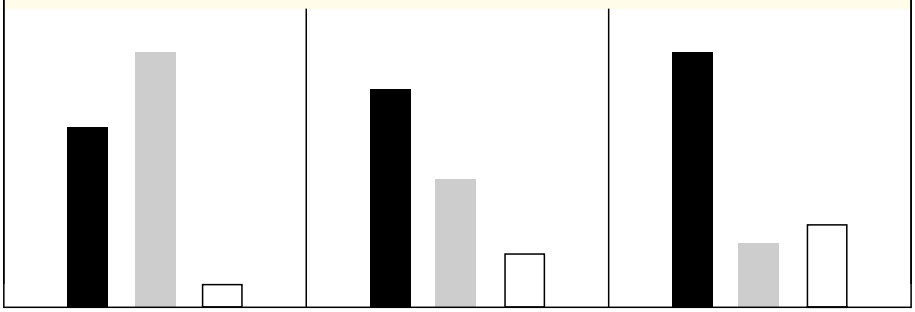

Accuracy classes			
G 0	**G 1**	**G 2**	**G 3**
Fields of application			
Measuring machines dressing units, special applications			
	CNC machines, CNC machining centers		
		Handling, robotics, auxiliary axes	

Rigidity

Service lifetime

Moving resistance

MONORAIL-Linear Guideways

Type	**Roller MONORAIL MR**	**Ball MONORAIL BM**
Design	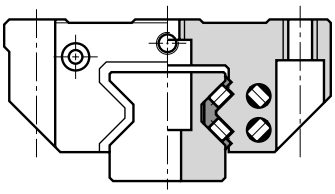	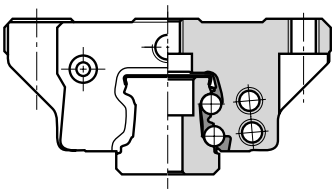
Technical characteristics	4 roller tracks in O-geometry, rollers with convex surface, completely sealed carriages, main dimensions in accordance with DIN 645-1, many versions and lubrication possibilities as well as numerous accessories for a broad application range	4 rows of balls with 2-point contact in O-geometry, optimized track geometry with a low number of transitions, small number of components, reduced maintenance as a result of integrated lubricant reservoirs, completely sealed carriages, trapezoidal-shaped rail section for a high rigidity and easier replacement of parts subject to wear, main dimensions in accordance with DIN 645-1
Loading capacity	●●●●	●●
Rigidity	●●●●	●●●
Accuracy	●●●●	●●●●
Service lifetime	●●●●	●●●
Running characteristics/pulsation	●●	●●●●
Friction characteristics	●●	●●●●
Admissable speed	●●●	●●●●
Easy installation and maintainance	●●●	●●●●
Requirements on accuracy and rigidity of the surrounding structure	●●	●●●
Integrated measuring system	yes	no
Integrated rack	yes	no
Main fields of application	Machine tools for high metal removal performance capacities and long service lifetimes, machines/installations with minimum assembly dimensions, CNC machining centers, CNC lathes, CNC grinding machines, EDM machines, injection molding machines	Machine tools for smaller and medium metal removal performance capacities, auxiliary axes, wood processing machines, sheet-metal processing machines, water-jet-/laser cutting installations, automatic punching/stamping machines, robotics, handling devices and automation technology, electronics and semiconductor technology, measuring technology, medical technology

●●●● = excellent ● = satisfactory

2.1 MONORAIL MR in a 3-axis drilling and milling machine with integrated distance measuring system AMS

The machine
The 3-axis drilling and milling machine in moving column construction is utilized in manufacturing systems for the production of series components. This construction is particularly adapted to short machining times and high speed. The Y- and Z-axes are driven with servomotors through balls screw drives, the X-axis with a linear motor. All axes are equipped with roller linear guideways MONORAIL MR with integrated magnetic distance measuring system AMS. The working space is 1400 × 100 × 200 mm (X–Y–Z).

The requirements
Because the machine concept was a very compact design with high speed linear drive, the essential guideway criteria were high rigidity and small size. In addition, a solution for the integration of a high-resolution distance measuring system had to be found.

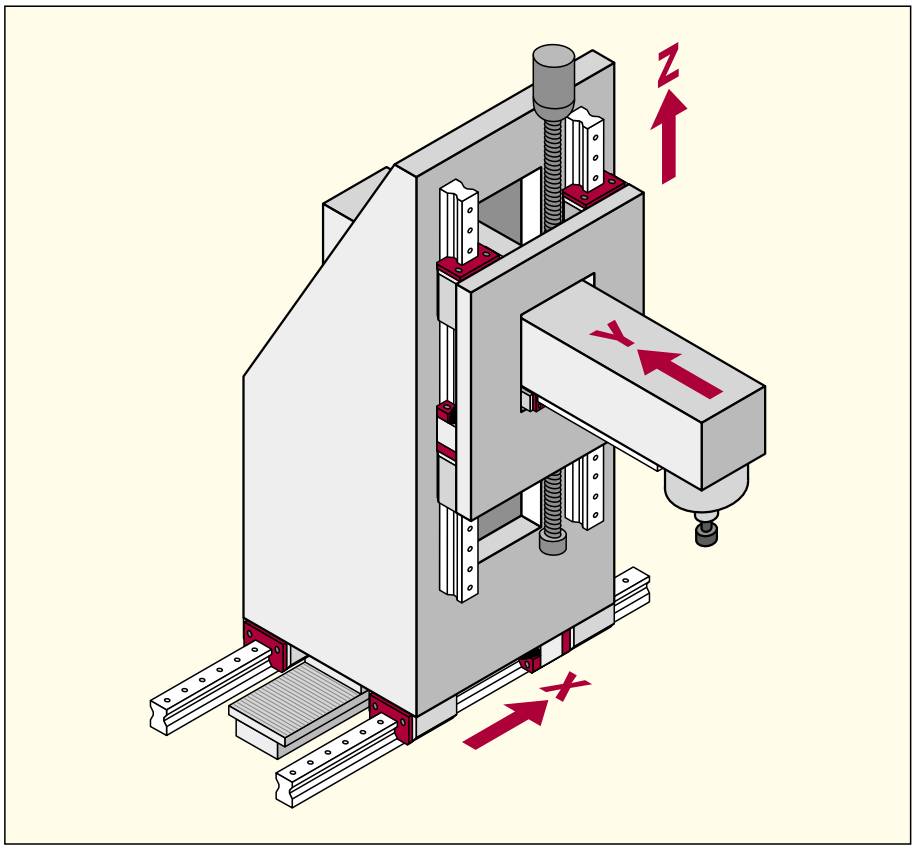

The SCHNEEBERGER solution
With the MONORAIL MR in this application, the advantages of a compact roller guideway in O-geometry, such as high rigidity and load-bearing capacity as well as static and dynamic precision with a minimum size, were realized. In the X-axis the size MRD 35 could be utilized despite the high attractive force of the linear motor. Because of the very restricted space conditions for the Y-axis, the described solution could only be achieved with the utilization of the compact size MR 25 and the integration of the magnetic scale into the guide rail.

The essential advantages
- Compact machine construction due to a reduced size of the guideways and the integrated distance measuring system
- Improved machine precision with high dynamics due to the high rigidity values of the roller guideway
- Reduced manufacturing and assembly effort because of the integration of the distance measuring system AMS into the guideway
- Operational stability of the distance measuring system by means of optimized mechanics and electronics, even though the linear drive was in close proximity
- High safety margins and long service lifetime due to the high load bearing capacity of the MONORAIL MR guideways
- Elimination of covers in the Y-axis by using guide carriages sealed on all sides

SCHNEEBERGER products utilized

X-axis	2 × MR 35-D2-1800-G1-V3
	1 × AMSA 35-1800-SI
Y-axis	2 × MR 25-C2-0350-G1-V3
	1 × AMSA 25-0350-SI
Z-axis	2 × MR 35-C2-0450-G1-V3
	1 × AMSA 35-0450-SI

2.2 MONORAIL MZ with integrated rack in a 3-axis profile/contour machining machine

The function
The 3-axis machine in gantry construction serves for profile / contour milling, drilling and the carving of materials such as wood or acrylic glass. Both the X-axis as well as the Y-axis are equipped with MONORAIL MZ roller guideways, whereby the drive is through the integrated rack. The Z-axis is equipped with two standard MONORAILs MR. Here the drive is a recirculating ball spindle.

The requirements
When developing this new robust generation of machines for heavy-duty applications, the increase of the cutting performance capacity and a high reliability of the machine were primary objectives. At the same time, the precision and the surface quality were also improved.

The SCHNEEBERGER solution

The high demands set could be fulfilled by the utilization of MONORAIL roller guideways MZ with integrated rack instead of the ball guideways with separate rack previously utilized. The SCHNEEBERGER product in an ideal manner combines the advantages of the roller guideway, such as a high load-bearing capacity and rigidity with the precision of the straight toothed MZ rack.

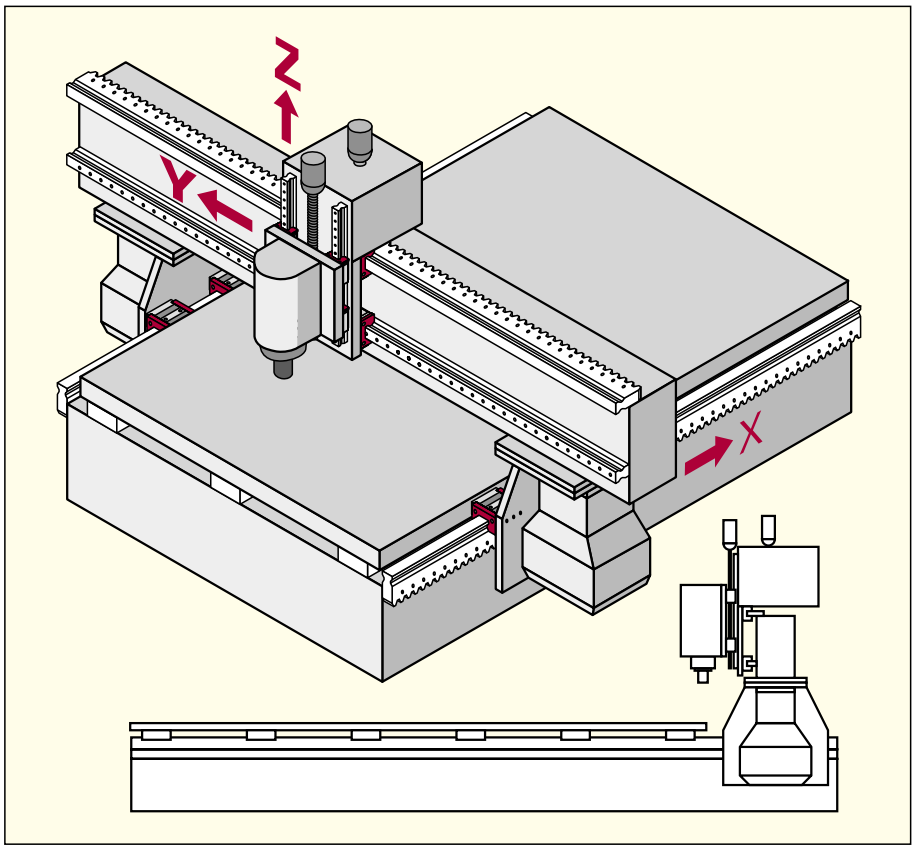

The essential advantages

- Space saving by utilizing the roller guideway size 25 (previously ball guideway size 35)
- Savings in time and cost by the elimination of machining – and aligning effort for the separate rack
- Higher positioning accuracy and repeatability by a defined pinion pre-loading of the precise MZ rack
- High cutting capacity
- Improved surface quality

SCHNEEBERGER products utilized

X-axis	2 × MZ 25-E2-5400-G3-V1
Y-axis	1 × MZ 25-E2-3350-G3-V1 and
	1 × MR 25-C2-3350-X-G3-V1
Z-axis	2 × MR 25-C2-0510-X-G3-V1

2.3 MONORAIL BM in a 4-axis drilling and milling center for printed circuit boards

The machine

On the 4-axis drilling and milling center in gantry construction printed circuit boards are machined. Depending on the version, on the X1-axis there are up to 6 drilling heads, which are coupled to one another via connecting rods and are synchronously moved by means of a common linear motor. With this, several workpieces can be processed simultaneously. The drive itself is located on the separate X2-axis, which like the X1-axis is equipped with high-precision ball MONORAIL BM. The machine table (Y-axis) for moving the workpiece is also equipped with MONORAIL BM guideways and a linear drive. The tool feed in the Z-axis is effected using servomotors.

The requirements

The machine outlined set new standards in its class with respect to performance capacity, precision, high up-time and low maintenance requirements. For the guideways this meant high demands on the rigidity and running precision of the individual carriages, because, despite the high accuracy, the design utilized only one carriage per rail to support each drilling head.

The SCHNEEBERGER solution

The special requirements in this application are appropriately fulfilled by the SCHNEEBERGER ball guideway MONORAIL BM, due to its excellent running characteristics and its high economy. The comparatively high rigidity as well as the straightness of the guideways BM 25 is even improved in the X1- and X2-axes by the utilization of rails with a halved attachment hole spacing. In the Y-axis with the high magnet forces resulting from the linear drive, 4 rails are utilized because of the demanded low deflection (sag) of the table. Here too, thanks to its optimized load-bearing capacity, a ball guideway MONORAIL BM 35 is utilized.

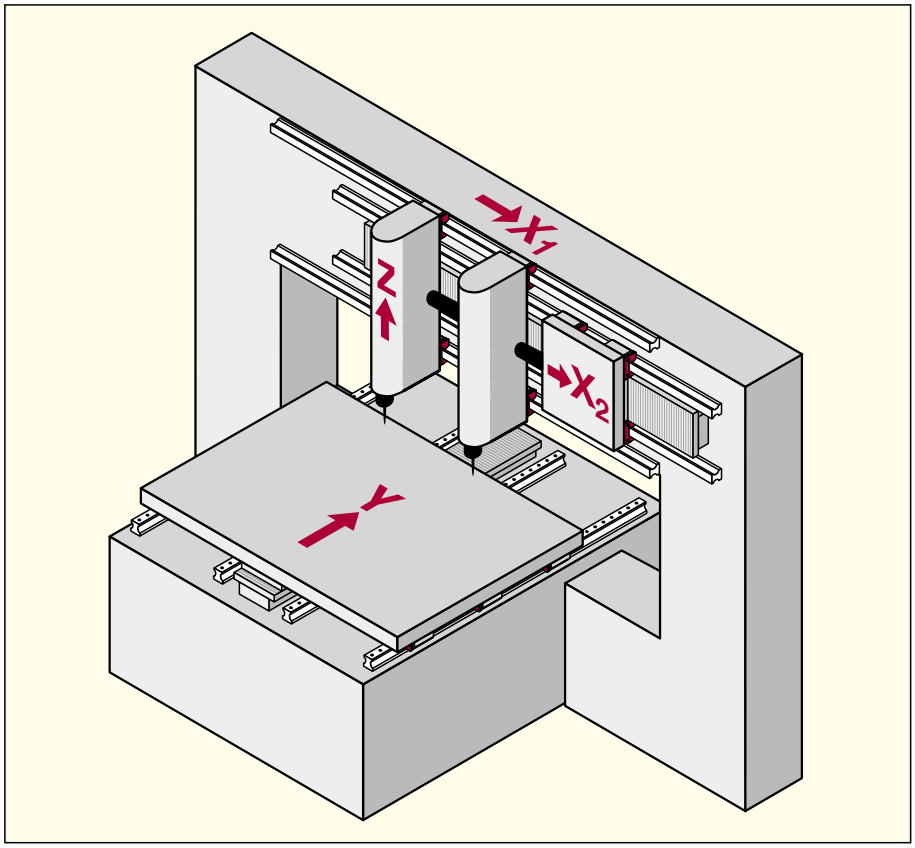

The essential advantages

- High machine accuracy due to rigid guideways with optimized running characteristics, i. e., low and uniform friction, low pulsation and high running precision of the individual carriages
- Improved performance capacity, i. e., high speeds and accelerations due to the optimized track geometry and low mass
- Savings in space and weight with size BM 25 while retaining high load-bearing capacity and rigidity
- Robustness resulting from a small number of components and complete sealing
- Low maintenance effort due to the easy replacement of parts subject to wear on the rail and extended lubrication intervals

SCHNEEBERGER products utilized

X1-axis:	2 × BM 25-D2-3240-X-G0-V1
X2-axis (linear drive):	2 × BM 25-C2-1860-G0-V1
Y-axis:	4 × BM 25-C3-1560-G0-V1

SCHNEEBERGER LINEAR TECHNOLOGY

3.1 Accuracy classes G0, G1, G2, G3

The four accuracy classes allow the user to select the configuration of MONORAIL guideways that best meets specific application-design requirements. The accuracy classes determine the dimensional tolerances and running accuracy of the carriages on the rails.

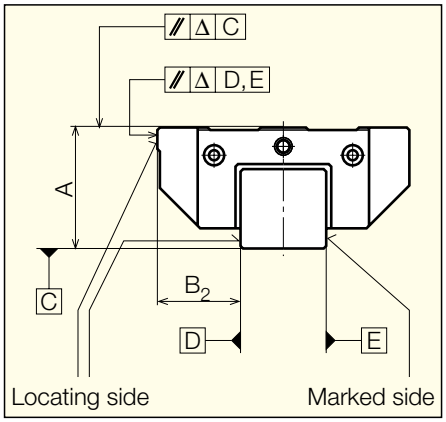

3.2 Dimensional tolerances

Accuracy-class	Tolerances * A and B_2	1 rail ** Δ A and ΔB_2	2 or more rails *** Δ A standard	*** Δ A matched
G0	± 5 µm	3 µm	10 µm	5 µm
G1	± 10 µm	5 µm	20 µm	7 µm
G2	± 20 µm	10 µm	40 µm	10 µm
G3	± 50 µm	25 µm	100 µm	25 µm

* Measured at the middle of the carriage.
** Dimension difference between two or more carriages of a rail measured at the middle of the carriage and at the same rail position.
*** Dimension difference of the carriages when two or more rails are used side-by-side measured at the middle of the carriage and at the same rail position (state **-GP** matched when ordering).

3.3 Running accuracy Δ of the carriages on the rails

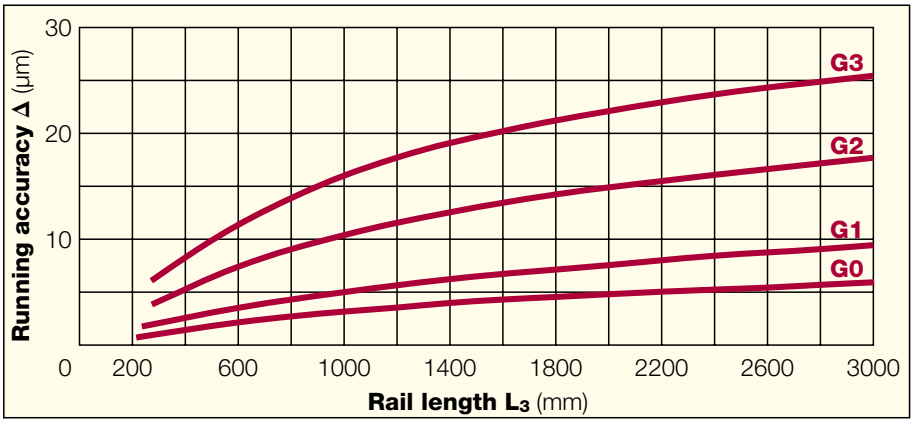

The running of the carriages within the limits of the tolerance can have a linear or wave-shaped course. The height of the tolerance is determined from the adjacent diagram in function of the rail length and the accuracy class. Example: L_3 = 2000 mm with G2 results in a permissible tolerance of 0.015 mm.

3.4 Preload classes V1, V2, V3

Preloading increases the rigidity of the guideway but also affects operational life and increases translation resistance. The MONORAIL system is available in various preload classes that correspond to the individual accuracy classes to address specific application requirements. The preload is dependent on the dynamic loading capacity C.

Preload class	Preload	Accuracy class
V1	0.03 · C	G0, G1, G2, G3
V2	0.08 · C	G0, G1, G2, G3
V3	0.13 · C	G0, G1, G2, G3

3.5 Rails and carriage information

Rail lengths

Maximum length of single-piece rails L_3

Single-piece rails are manufactured in lengths according to the following chart. Longer rails consist of several pieces with butt joints. The joints are always in the middle of two attaching holes located.

Rail ends of part segments, which are joined together, are ground on the front side and have sharp edges. External rail ends and the ends of single-piece rails are cut on the end sides and deburred. Depending on the deburring process, the ends can manifest a black discoloration. This discoloration has no influence whatsoever on the quality.

Maximum length of single-piece rails L_3 (lengths in mm)

Type	Hardening proc.	15	20	25	30	35	45	55	65
MR	inductive			3000		3000	3000		
	through hardened			2000		2000	1800		
BM	inductive		1500	3000					
	through hardened	1500							
MZ	inductive			2400		2400			

Standard rails lengths

The standard rail lengths are

for MONORAIL MR and BM $L_3 = (n^* \cdot L_4 - 2\text{ mm})$, for MONORAIL MZ $L_3 = n \cdot L_4$

Custom rail lengths

Rail lengths other than those standard rail lengths above are calculated according to the following formula:

$L_3 = n \cdot L_4 + L_5 + L_{10}$ mm

The following values should be maintained for hole pitch L_5 and L_{10}:

$L_{5\,max}, L_{10\,max} = L_4 - (\frac{f_2}{2} + 1)$ mm

$L_{5\,min}, L_{10\,min} = \frac{f_2}{2} + 1$ mm

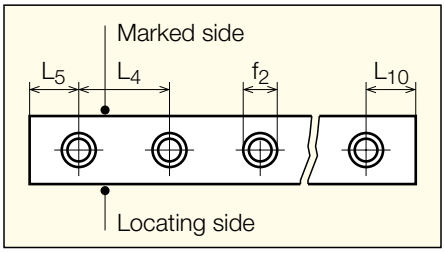

*n = 3, 4, 5…

Tolerances for rail lengths and attaching holes

The length tolerance for single- and multi-piece rails is $L_3 \, ^{0}_{-2}$ mm

The position tolerance of the attaching holes in single- and multi-piece rails is:

Inductive hardened rails	**BM 15–45, MR 25–65**
t (mm) according to DIN ISO 1101	0.4

Through hardened rails	**$X_n \leq 600$ mm**	**$X_n > 600$ mm**
t (mm)	0.6	$0.001 \cdot X_n$

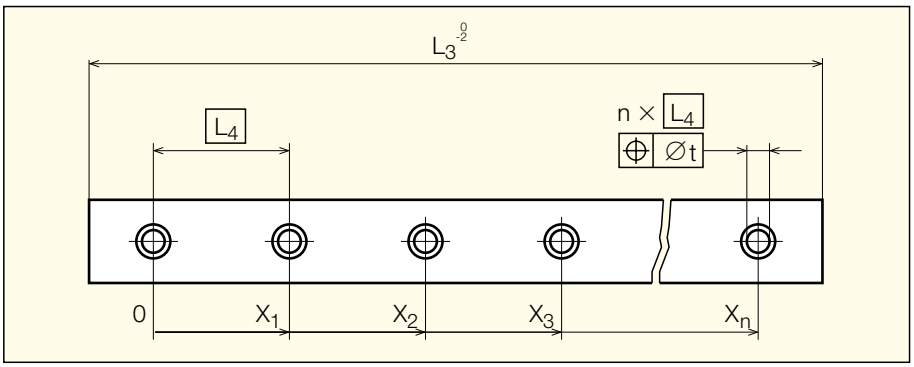

Rails with tapped attachment holes at the bottom

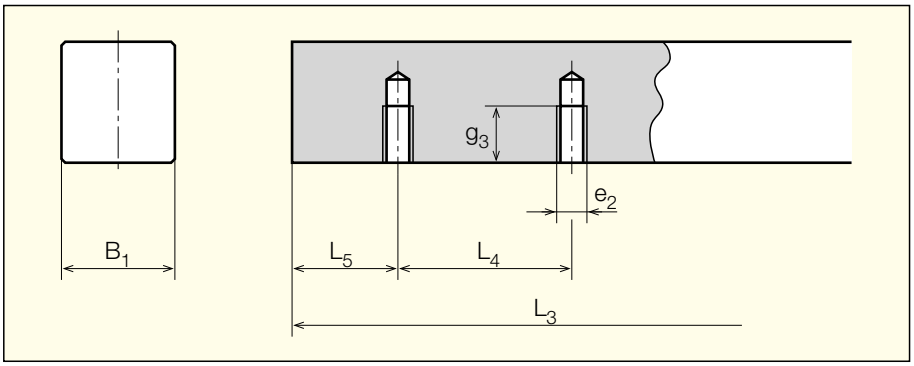

Size	**15**	**20**	**25**	**30**	**35**	**45**	**55**	**65**
e_2 (mm)	M 5	M 6	M 6	M 8	M 8	M 12	M 14	M 16
g_3 (mm)	8	10	12	15	15	19	22	25

See table in fig. 4.2/7.2 for all other dimensions
Ordering information see chapter 4.6/7.6

For MONORAIL BM in applications with high contamination the additional wipers ZBN-U/ ZBV-U are recommended.

Through hardened rails

MONORAIL-MR-rails can also be supplied in a through hardened version. This has advantages in the case of the following applications:

- Increased straightness requirements
- Utilization of the rail surface for supporting sheet metal covers
- Protection of the rail surface against scratches or scoring due to bombardment with metal chips

The maximum single piece length in this case is 1800 mm, for size MR 25 and MR 35 2000 mm. Furthermore, the positioning tolerances of the attachment holes have to be observed.

Hard-chromed rails and carriages

For applications requiring a special corrosion protection, e. g. in clean room or vacuum, because of a high relative humidity or an increased resistance against wear of the surfaces is required, MONORAIL rails and carriages can also be supplied in a hard-chromed version. The essential advantages of this coating applied by electro-plating are:

- Very good corrosion protection
- Very high resistance against wear and very high load bearing capacity of the surface
- Exceptional adhesive power and uniform distribution of the thickness of the coating
- Good sliding and therefore emergency running characteristics, because of the micro-pearl structure

It must be noted, that bores and threads and rolling elements are not chromium-plated. Carriages in hard-chromed version can only be supplied in preload classes **V2, V3.** When ordering, additionally include **–H** for chromed rails resp. **–HH,** if rails **and** carriages have to be chromed.

Special hole spacings L_4

Double or half hole spacing L_4: MONORAIL-MR-rails can on request (standard in the case of MZ) be supplied with double hole spacing L_4. It must be noted, that in this case the load bearing capacity is halved.
Also available for the MONORAIL BM for an increase of the rigidity and in order to improve the running accuracy are rails with a halved hole spacing (corresponds to MR standard L_4).
Ordering designation: -X-

Other special hole spacings: If the hole spacing changes over the length of the rail, e.g., at the junction points in case of rails made out of several parts or if a special L_4 is required, then this has to be particularly mentioned in the order and a drawing included.
Ordering designation: -Y-

Additional alignment bores and threads

As an option, rails and carriages can be supplied with additional bores for alignment pins or with additional tapped bores. In such a case, when ordering it is imperative that a drawing is enclosed. For more detailed information, please contact your SCHNEEBERGER representative.

3.6 Lubrication

An adequate lubrication is required to maintain the function of linear guideways, because lubricant protects against wear and corrosion and in addition reduces the friction. This also calls for a regular subsequent lubrication. Possible lubricants are both grease as well as liquid grease or oil.

As delivered condition

At delivery the carriages are preserved with a roller bearing grease (lithium based saponified grease). This is sufficient as a protection for the assembly of the guideway. Before taking into operation it must be guaranteed that enough lubricant is in the carriages and on the beforehand cleaned rails.

Lubrication connections

The front plates are fitted with several prepared lubrication connections with threads. These are located at the front and on the side (please refer to the table below). Here either a grease nipple can be attached or a central lubrication system connected. In doing so, both sides of the carriages (i. e., all four tracks) are provided with lubricant.

The front plates furthermore are equipped with an O-ring seat on top for direct connection to a central lubrication system through the connection construction. Here too, both sides of the carriages are provided with lubricant.

In the standard version, the thread M 6 (M 3 in the case of BM 15) at the center of the front plate (-SM) is foreseen for the connection of the lubrication system. From the factory, these lubrication bores in the front plate are closed on both sides with a cap plug. The corresponding cap plug for the required bore has to be removed by the customer.
The other connections are closed.

If a lateral connection is required, then this has to be indicated on the order sheet. The lubrication connection selected is opened by SCHNEEBERGER and the one at the center closed.

Ordering information:	Front laterally:	– SV (not for MR 25, MONORAIL BM)
	Lateral:	– SS (not for MR 25)

The lateral connections of the sizes BM 15 and BM 20 are prepared so that an M 3 nipple can be attached.

For a lateral lubrication connection in the case of size MR 25, the intermediate plate ZPL 25 has to be used (please refer to chapter 4.5).

Connection thread in the front plate in front and on the side

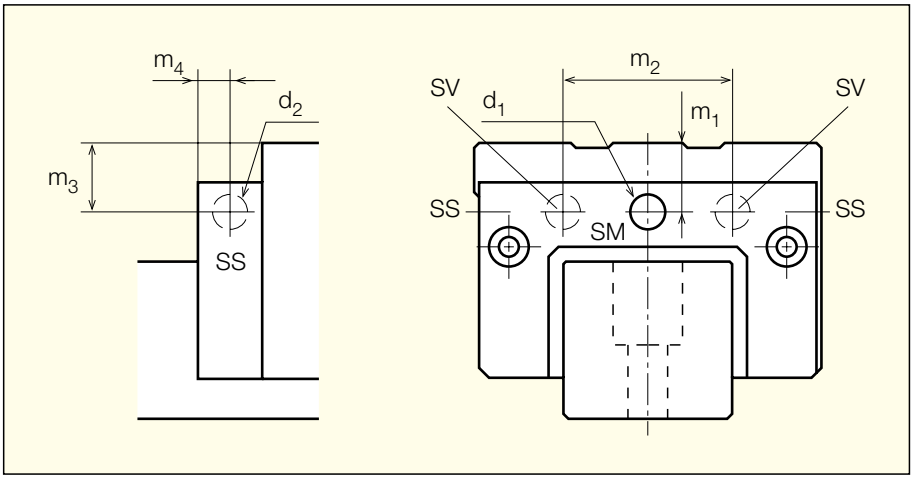

Type	Dimensions (mm) m_1	m_2	m_3	m_4	d_1	d_2
MRA/B 25 **MRC/D 25**	5.5 9.5	–	–	–	M6	M6
MRA/B 35 **MRC/D 35**	7.0 14.0	32.0	7.0 14.0	6.5	M6	M6
MRA/B 45 **MRC/D 45**	8.0 18.0	40.0	8.0 18.0	7.5	M6	M6
MRA/B 55 **MRC/D 55**	9.0 19.0	50.0	9.0 19.0	8.5	M6	M6
MRB/D 65	13.0	64.0	13.0	12.5	M6	M6

Type	Dimensions (mm) m_1	m_2	m_3	m_4	d_1	d_2
BMA 15 **BMC 15**	4.0 8.0	–	4.0 8.0	4.0	M3	M3
BMA/B/C/D 20	5.2	–	5.2	5.0	M6	M3
BMA/B 25 **BMC/D 25**	5.5 9.5	–	5.5 9.5	6.0	M6	M6
BMA/B 30 **BMC/D 30**	7.0 10.0	–	7.0 10.0	6.0	M6	M6
BMA/B 35 **BMC/D 35**	7.0 14.0	–	7.0 14.0	6.5	M6	M6
BMA/B 45 **BMC/D 45**	8.0 18.0	–	8.0 18.0	7.5	M6	M6

Lubrication connection from above

If lubrication is required from above, the required location has to be indicated with the order. The necessary retrofitting work is carried out by SCHNEEBERGER.

Ordering information: From above: – SO

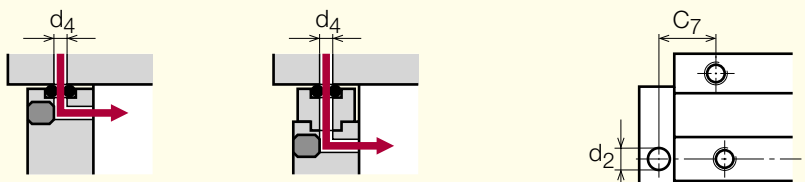

MRA/MRB
BMA/BMB
BMC/BMD

MRC/MRD

d_1 = O-ring internal diameter
d_2 = Counterbore diameter
d_3 = O-ring thickness
d_4 = Open O-ring internal diameter

C_7 (mm)	MR 25	MR 35	MR 45	MR 55	MR 65
MRA	12.0	14.0	17.0	21.5	–
MRB	23.2	27.5	34.5	42.5	54.0
MRC	17.0	20.0	27.0	31.5	–
MRD	20.7	22.5	34.5	42.5	49.0
d_4	6.0	6.0	6.0	6.0	6.0
d_2	10.0	10.0	10.0	10.0	10.0

C_7 (mm)	BM 15	BM 20	BM 25	BM 30	BM 35	BM 45
BMA	8.0	10.5	13.2	14.5	14.5	17.0
BMB	–	18.5	22.7	25.5	27.25	32.75
BMC	10.0	12.5	18.2	20.5	20.5	27.0
BMD	–	13.5	20.2	21.5	22.25	32.75
d_4	4.0	6.0	8.0	8.0	8.0	8.0
d_2	8.0	10.0	12.0	12.0	12.0	12.0

Type	d_1	×	d_3
BM 15	4.48	×	1.78
BM 20, MR 25–65	6.75	×	1.78
BM 25–45	8.73	×	1.78

General information

- The lubrication connections are plastic threads. Therefore care must be taken when installing fittings.
- Any retrofitting work on the end plates for changing the lubrication connection should be carried out by SCHNEEBERGER. In case of rework by the customer, it is necessary to contact SCHNEEBERGER beforehand.
- Grease nipples as well as lubrication adapter pieces are not included on the carriages and have to be ordered separately.

Special installation orientations

In the case of a lubrication with grease, it is assured that all four tracks of the carriage are provided with lubricant, in all installation orientations.

Oil, however, has the tendency to follow the law of gravity and therefore to flow downwards, thus only to one side of the running track.

In the case of lubrication with oil and a horizontal or vertical installation, no special measures are needed. On the basis of the significantly reduced lubrication channel volumes, this is also applicable for an application rotated by 180 deg around the longitudinal axis of the rail. In case of a vertical installation, the lubrication connection has to be made in the upper front plate.

If, however, an **oil lubrication** and a different orientation (e. g., inclined by 10 deg to 90 deg around the longitudinal axis of the rail) is foreseen, then it has to be ensured, that all four tracks of the carriage are provided with sufficient lubricant. Depending on the type of guideway, this is achieved differently.

In the case of **MONORAIL MR 35–MR 65,** both sides of the rail can be lubricated independently from one another, this is implemented by a modification to the front plate and by using 2 lubrication connections in front or on the side.

Ordering information: Special: –ST

When ordering, the required connections have to be indicated on the order sheet. For lubricant quantities, refer to the chapter Lubrication with Oil.

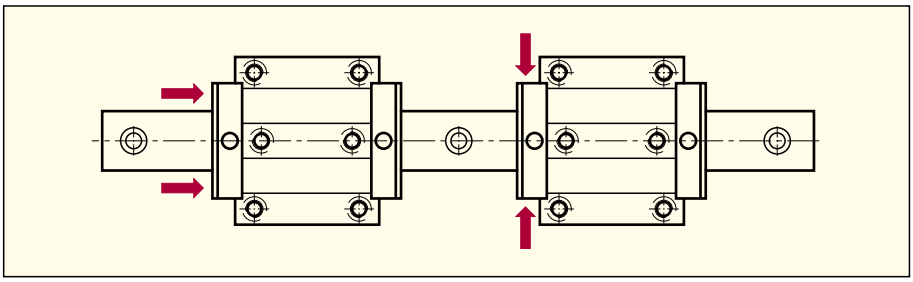

In the case of **MONORAIL MR 25** and **MONORAIL BM 15–45,** the lubricant distribution is effected both during the first lubrication as well as during subsequent lubrication by injecting the total required quantity of oil either with a single impulse or with several impulses in close sequence and while the carriage is in motion. For lubricant quantities, refer to the chapter Lubrication with Oil.

In the case of **MONORAIL BM 25–45,** both sides of the rail can be lubricated independently from one another, this is implemented by mounting a special front plate STB-ST on one carriage end and by using two lubrication connections on the side.

Ordering information: Special: –ST

When ordering, the required connections have to be indicated on the order sheet. For lubricant quantities, refer to the chapter Lubrication with Oil.

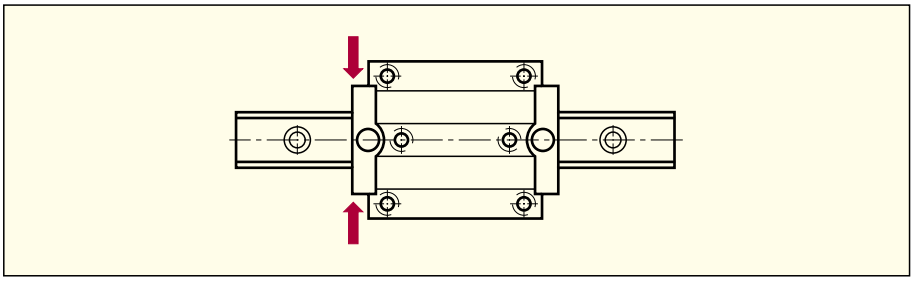

In the case of special installation orientations, the customer should include an installation drawing with the inquiry, to obtain a recommendation from SCHNEEBERGER regarding lubrication! In the case of a single lubrication connection per carriage, grease, or liquid grease, is preferred over oil.

Short stroke – general lubrication remark

In the case of a stroke smaller than 2 × the carriage length, two lubrication connections are recommended, i. e., a lubrication from both ends.
If in the case of a **short stroke** the number of connections is doubled, then the total quantity of lubricant for subsequent lubrication nonetheless remains the same per carriage, i. e., the quantity per end is halved.

Lubrication with oil

For the lubrication using oil, SCHNEEBERGER recommends mineral oil CLP (DIN 51517) or HLP (DIN 51524) in the viscosity range of ISO VG32 to ISO VG100 in accordance with DIN 51519. Bed track oils CGLP up to ISO VG220 can also be used.

Initial lubrication prior to operation
Prior to operation, the carriages have to be filled with the indicated quantities for the first lubrication. In doing so, the total oil quantity should be injected in a single impulse or in several impulses in short succession while the carriage is being moved. The indicated quantities are applicable per carriage with one connection. If two connections per carriage are used, then the values have to be correspondingly halved.
In case of a special installation orientation or a short stroke, the lubrication guidelines in the corresponding chapters have to be followed.

Initial lubrication oil qty/carriage in cm³	**MR 25**	**MR 35**	**MR 45**	**MR 55**	**MR 65**
Any installation orientation	0.95	0.55	0.70	0.90	1.20

Initial lubrication oil qty/carriage in cm³	**BM 15**	**BM 20**	**BM 25**	**BM 30**	**BM 35**	**BM 45**
Any installation orientation	0.20	0.50	0.60	0.90	1.10	1.20

Subsequent lubrication intervals and quantities
The subsequent lubrication intervals depend on the load on the carriages and on external factors. As an indicative value, with a speed of $v \leqslant 1$ m/sec and a load ratio $C/P \geqslant 2$, the following interval for subsequent lubrication can be assumed:

Subsequent lubrication interval = 30 km

The lubrication quantity to be provided in accordance with this lubrication interval can be taken from the following table.

Applicable in case of a normal installation orientation is:

Table value:
pulse lubrication quantity × number of pulses per lubrication interval

Example: With v = 0.2 m/sec and 100% operating time, the lubrication interval of 30 000 m corresponds to approximately 40 operating hours. With a lubrication quantity requirement of 0.50 cm^3 in accordance with the table, a pulse oil quantity of 0.1 cm^3 every 8 hours follows.
In the case of a special installation orientation or short stroke, the lubrication information in the corresponding chapter has to be observed.

Subsequent lubrication oil qty per carriage in cm^3	**MR 25**	**MR 35**	**MR 45**	**MR 55**	**MR 65**
Normal installation orientation	0.15	0.25	0.35	0.50	0.70
Special installation orientation	0.95	0.55	0.70	0.90	1.20

Subsequent lubrication oil qty per carriage in cm^3	**BM 15**	**BM 20**	**BM 25**	**BM 30**	**BM 35**	**BM 45**
Norm. inst. orientation	0.07	0.17	0.20	0.30	0.35	0.40
Spec. inst. orientation	0.14	0.34	0.40	0.60	0.70	0.80

Remarks

The values indicated above are only guideline values. An accurate determination of the quantities and intervals can only be determined under real operating conditions.
It is recommended to lubricate at least 1× per month and after a longer machine shutdown prior to putting it into operation again.
In the case of unfavorable conditions, loads, climate, ambient conditions, a more frequent lubrication is necessary.

Lubrication with grease

SCHNEEBERGER recommends KP2K grease in accordance with DIN 51825.

Attention:
During greasing the carriage should be moved several times over a distance corresponding to at least 3 times its length.

Initial greasing prior to operation
After the installation of the MONORAIL guideway, an initial greasing of the carriages has to take place. This also applies if the mounting of lubrication plates is additionnally foreseen. The quantities indicated are applicable per carriage.

Initial greasing grease qty per carriage in g	**MR 25**	**MR 35**	**MR 45**	**MR 55**	**MR 65**
MRA/MRC	1.8	2.8	5.0	8.0	–
MRB/MRD	2.1	3.5	6.3	10.1	18.0

Initial greasing grease qty per carriage in g	**BM 15**	**BM 20**	**BM 25**	**BM 30**	**BM 35**	**BM 45**
BMA/BMC	0.8	1.6	2.7	4.3	6.3	12.0
BMB/BMD	–	2.0	3.3	5.2	7.7	14.8

Subsequent lubrication intervals and quantities
The subsequent lubrication intervals depend on the load on the carriages and on external factors. As an indicative value, with a speed of $v \leqslant 1$ m/sec and a load ratio $C/P \geqslant 2$, the following interval for subsequent lubrication can be assumed:

Subsequent lubrication interval = C/P · 100 km

The quantity of grease to be provided in accordance with this interval can be taken from the following table.

Subsequent lubrication grease qty per carriage in g	**MR 25**	**MR 35**	**MR 45**	**MR 55**	**MR 65**
MRA/MRC	0.4	1.0	2.0	3.0	–
MRB/MRD	0.5	1.2	2.3	3.8	7.0

Subsequent lubrication grease qty per carriage in g	**BM 15**	**BM 20**	**BM 25**	**BM 30**	**BM 35**	**BM 45**
BMA/BMC	0.3	0.6	1.0	1.6	2.4	4.7
BMB/BMD	–	0.8	1.3	2.0	3.0	5.8

Remarks

The values indicated above are only guideline values. An accurate determination of the quantities and intervals can only be determined under real operating conditions.
It is recommended to lubricate at least every 3 months.
In the case of unfavorable conditions, loads, climate, ambient conditions, a more frequent lubrication is necessary.

NEW
Lubrication plate SPL

The lubrication plate is utilized in such applications, where long lubrication intervals are demanded. It enables an automatic and uniform supplying of the roller elements with lubricating oil over a long period of time. In order to achieve maximum travelling distances without any re-lubrication, the lubrication plates are always installed in pairs – i. e., one lubrication plate per carriage end and respectively installed in front of the front plates.

Installation positions

The SPL guarantees an assured supply of lubricant in all installation positions.

Delivered condition

General
The SPL is on principle delivered ready for installation, i.e., filled with oil. The lubrication connections for re-lubrication at the front in the centre (-SM) as well as on the narrow sides (-SS) are respectively closed off with a threaded pin, respectively a screw.

Delivery installed on the carriage
In the case of delivery together with a MONORAIL system or individual carriages, respectively two lubrication plates are installed on the carriage at the works. The carriages are in addition filled with a roller bearing grease (lithium based saponified grease on a mineral oil basis). A lubricating nipple for refilling the SPL is supplied loose.

Delivery as accessory / Individual component
In case of delivery of the SPL for retro-fitting, these are supplied in pairs ready for installation, i. e., filled with oil. A lubricating nipple for replenishing as well as the corresponding fixing screws DIN 7984 are enclosed in a separate plastic bag.

First oil fill

The SPL ex works SCHNEEBERGER Höfen / Enz is filled with oil type KLÜBER Lamora D 220 and therefore immediately ready for use.

First oil fill qty per lubrication plate in cm^3	**MR 25**	**MR 35**	**MR 45**	**MR 55**	**MR 65**
	3.1	8.4	15.6	26.8	61.0

Refilling interval and quantity

The refilling of the lubrication plates should take place in dependence of the load as well as of the other application conditions of the guideways. As a guideline value, the following refilling intervals can be assumed:

Refilling interval				
MR 25	**MR 35**	**MR 45**	**MR 55**	**MR 65**
2500 km		5000 km		

Remarks

The values indicated above are only guideline values. An accurate determination of the time intervals can only be established under actual operating conditions. In case of unfavourable conditions, loads, climate, environment, a more frequent refilling is necessary. Independent of the distance travelled, a refilling is necessary after a maximum of **12 months** of operation.

For the refilling of the lubrication plates, oil type **KLÜBER Lamora D 220** has to be utilized. In case of refilling with other lubricants, the SCHNEEBERGER will assume no liability whatsoever.

The oil quantity for the above indicated refilling intervals can be taken from the following table.

Refilling qty per lubrication plate in cm^3	**MR 25**	**MR 35**	**MR 45**	**MR 55**	**MR 65**
	2.2	6.0	11.0	19.0	43.0

The SPL is refilled through one of the three lubricating bores described above at the front in the middle or on the side. A lubricating nipple, which is supplied as an accessory, serves for filling the oil.

General remarks

- When lubrication plates are retro-fitted, on principle the carriages in addition have to be filled with grease. For the recommended lubricant quantities, please refer to the section on lubrication with grease
- In case of applications, in which coolant can come into contact with the MONORAIL guideways, additional wipers ZCN/ZCV have to be installed in front of every lubrication plate, refer to installation instructions SPL.

Service lifetime lubrication

The lubricant forms a protective film between the roller element and the track and prevents metallic contact. Therefore the lubrication protects against wear and corrosion.

Grease lubrication, frequently also referred to as service lifetime lubrication, is considered as a form of minimum quantity lubrication.

During the operation of MONORAIL guideways loss of lubricant takes place. In addition, the grease ages because of the diffusion of oil out of the carrier substance. These circumstances call for subsequent lubrication. The subsequent lubrication quantities and intervals have to be determined under operating conditions.

Depending on the application, i. e., corresponding to the loading ratio C/P, the stroke of the carriage and ambient influences, the useful service lifetime of the grease can amount to between some hundreds of hours and several years.

SCHNEEBERGER cannot guarantee, that with a single lubrication, the calculated service lifetime of the MONORAIL guideways will be achieved!

Without any subsequent lubrication, the service lifetime of the MONORAIL guideway will depend on the useful service lifetime of the grease!

Accessories

Greasing nipple

Hydraulic-type lubricating nipple, straight according to DIN 71412

Type	d	l_1	l_2	SW
SN 6	M 6	16	10.5	7

Application:
- BM 20–45
- MR 25–65

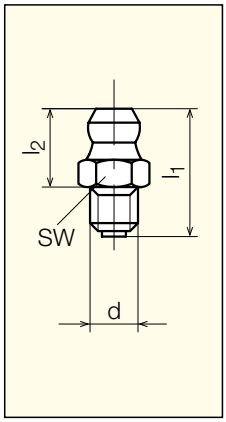

Hydraulic-type lubricating nipple, 45 deg according to DIN 71412

Type	d	l_1	l_2	b	SW
SN 6-45	M 6	21	15.5	15	9

Application:
- BM 20–45
- MR 25–65

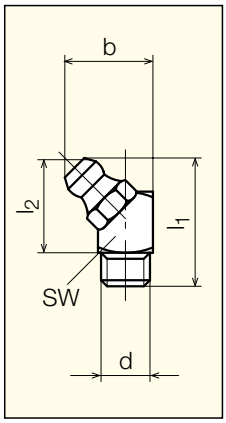

Hydraulic-type lubricating nipple, 90 deg according to DIN 71412

Type	d	l_1	l_2	b	SW
SN 6-90	M 6	18	12.5	19	9

Application:
- BM 20–45
- MR 25–65

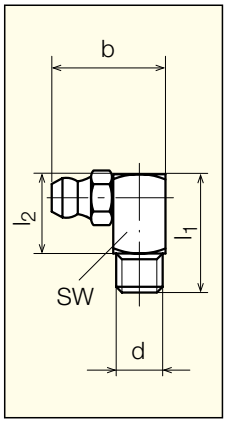

All dimensions in mm

Lubrication adapter

Lubrication adapter M 3

Type	d	l_1	l_2	SW
SN 3	M 3	10	5	4

Application:
- BM 15
- BM 20 only laterally

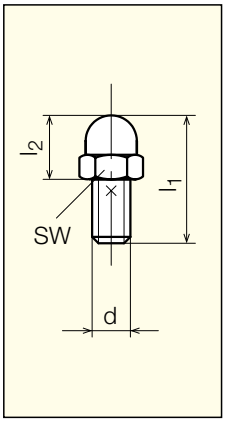

Straight screw-in connection M 3

For tubing with ext. diameter ∅ D = 3 mm

Type	d	g	l_1	l_2
SA 3-D 3	M 3	∅ 6	12	9.5

Application:
- BM 15
- BM 20 only laterally

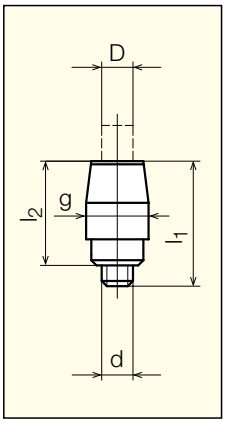

Adapter with hexagon insert bit

For tubing with ext. diameter ∅ = 4 mm

Type	d_1	d_2	l_1	l_2	SW
SA 6-6KT-G1/8	G1/8*	M 6	20	14	12
SA 6-6KT-M 8	M 8 × 1**	M 6	20	14	11

Application:
- BM 30–45
- MR 35–65

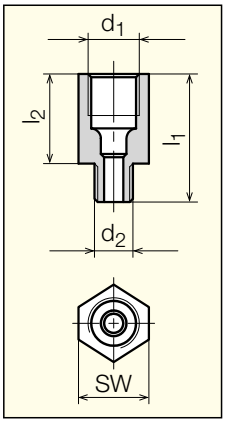

* G1/8 = 1/8'' BSP thread (not 1/8'' NPT)
** Counterbore in accordance with DIN 2367 for screwed pipe connections without soldering

Adapter, external round

For tubing with ext. diameter ∅ = 4 mm

Type	d_1	d_2	l_1	l_2	D
SA 6-RD-M 8	M 8 × 1*	M 6	20	14	10

Application:
- BM 20–45
- MR 25–65

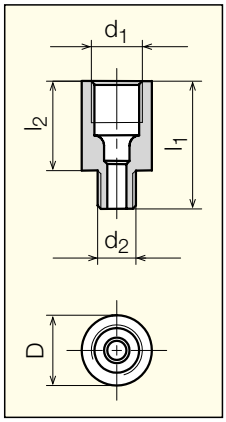

Banjo fittings

For tubing with ext. diameter ∅ =
SV 6-M 6 2.5 mm
SV 6-M 8 4 mm

Type	d_1	d_2	l_1	l_2	h	D	SW
SV 6-M 6	M 6 × 0.75*	M 6	22	16	18	10	9
SV 6-M 8	M 8 × 1*	M 6	22	15.5	22	10	9

Application:
- BM 20–45
- MR 25–65

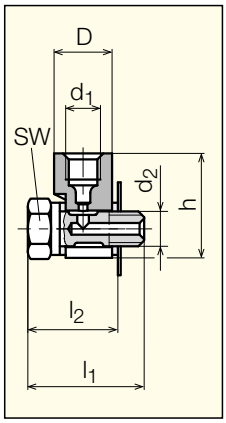

3.7 General data

Permissible speeds and accelerations

General applications under normal operating conditions:

	MR	BM
Speeds up to	3 m/s	5 m/s
Acceleration up to	50 m/s²	100 m/s²

Higher values are permissible. These depend on the carriage type, lubrication, installation orientation, preload and loading. The approval of a SCHNEEBERGER representative should be obtained in such cases.

Permissible operating temperatures

MONORAIL guideways can be used at operating temperatures between –40 °C and +80 °C. Short-term temperatures up to +120 °C are permissible. Does not apply to bellows.

Materials

SCHNEEBERGER rails, carriages and rolling elements are made from hardened and ground bearing steel as standard. The rails are induction-hardened and the carriages are through-hardened. Plastic components are injection-molded using POM, PAPA and TPU.

* Counterbore in accordance with DIN 2367 for screwed pipe connections without soldering

SCHNEEBERGER
LINEAR TECHNOLOGY

4.1 Product features

High rigidity, great dynamic and static load carrying capacity, outstanding running smoothness and the total enclosure of the carriage are the main features of the MONORAIL guideway. These properties result in higher machining rates while enhancing geometrical accuracy and surface quality of the machined workpieces. Our highly rigid MONORAIL provides improved vibration behavior, smaller vibration amplitudes and thus extends tool life.
SCHNEEBERGER has systematically applied its many years of experience in the design, production and use of roller-type anti-friction guideways in the development of the MONORAIL. Consequently the MONORAIL is a cost-effective anti-friction guideway which meets the challenge presented by modern machine design.

Rigidity

Linear guideways have a significant effect on the overall rigidity of a machine tool. The proven high rigidity of the MONORAIL is achieved by using rollers as rolling elements and by the optimization of the cross section of the carriage and the rail.

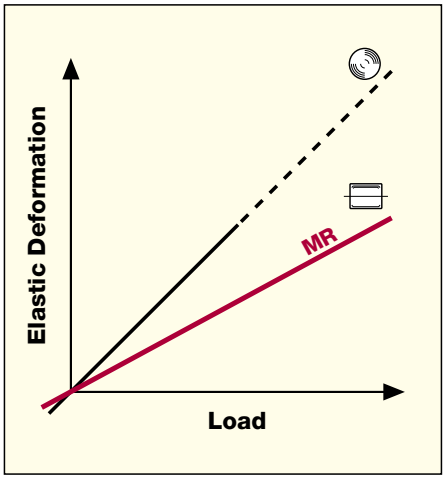

Load carrying capacity

In contrast to the circular-arch ball guideway, the roller guideway has a flat and noticeably larger contact area. This results in a substantially higher load carrying capacity and lower wear together with minimum rolling friction.

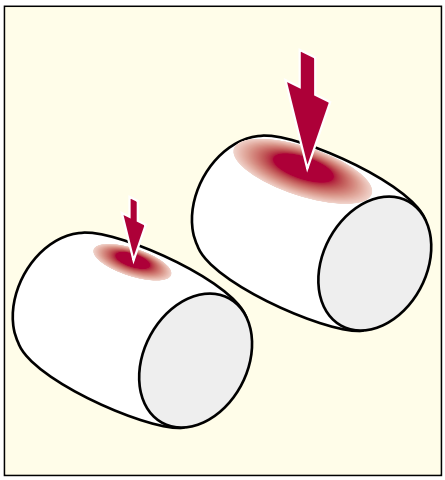

O-Geometry

The chosen O-arrangement of the rollers causes the force vectors to intersect outside, far from the rail center, allowing heavy loading by moments and forces acting in all directions.

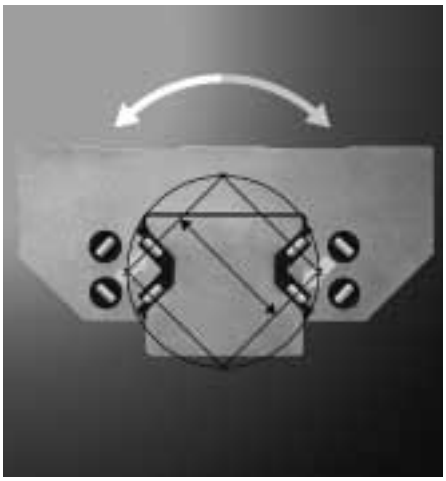

Running smoothness

The running smoothness of the MONORAIL is the result of the optimized geometry of the roller tracks.
Minimized guideway travel pulsation and a uniform translation force are extremely important in demanding machining applications.

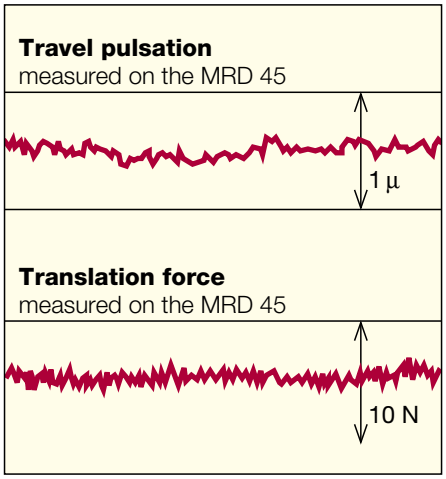

Wipers

Integral wipers that totally enclose the MONORAIL carriage protect the rollers and track surfaces from contamination. The double-lipped wipers minimize lubricant loss. Lubrication can be systematically fed into the roller recirculation zones regardless of installation orientation.

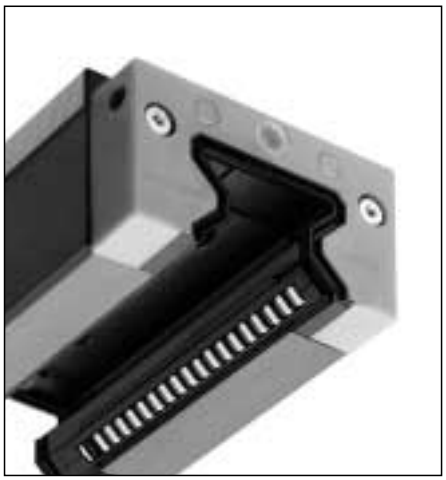

Versatile lubrication possibilities

The carriages can be lubricated through various lubrication connections (from the front, either side or above). The geometry of the lubrication channels, combined with efficient sealing, reduces lubricant consumption. This provides both economic and environmental benefits.

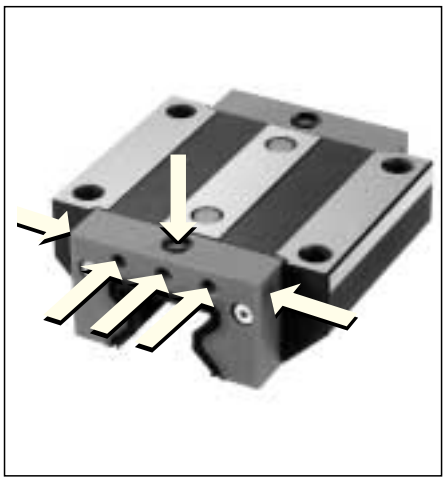

4.2 Dimension tables, loading capacities MONORAIL MR

Carriage types MRA and MRB

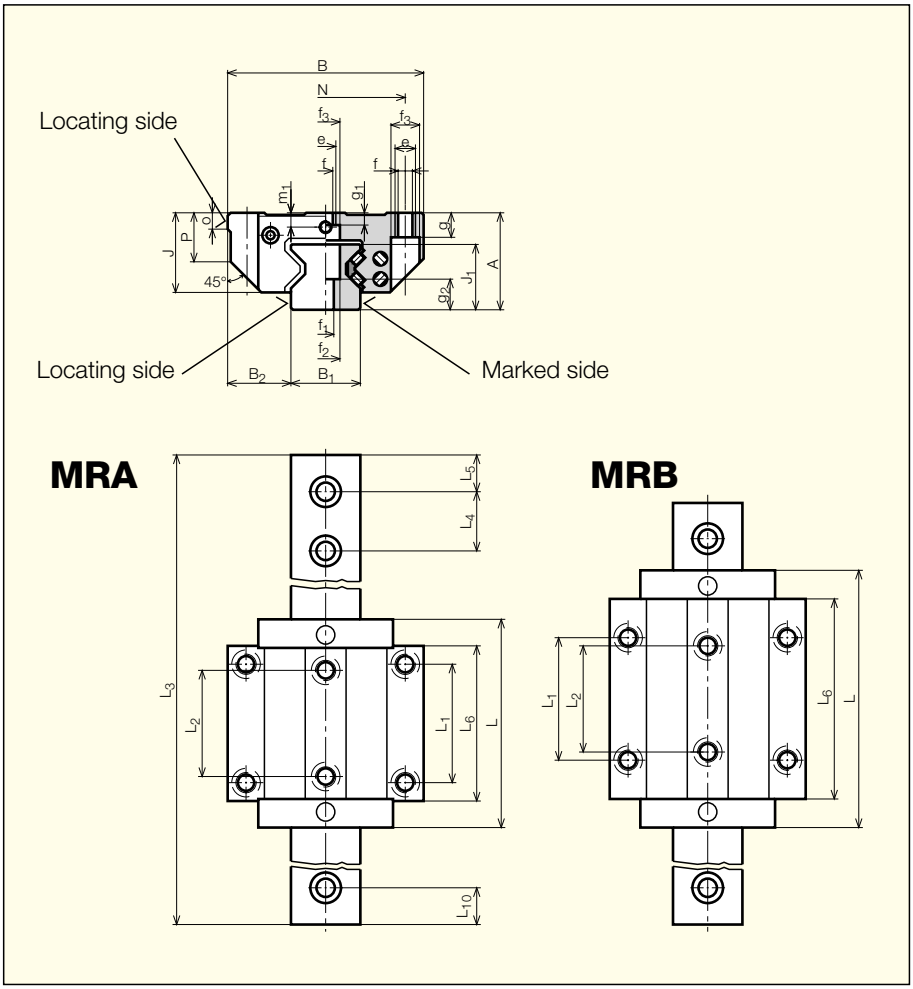

Drawings in dxf or dwg format are available on www.schneeberger.com in section Services.

Type	Dimensions (mm) A	B	B_1* ±0.05	B_2	J	J_1	L**	L_1	L_2	L_4	L_5/ L_{10}	L_6	N	e	f	f_1	f_2	f_3
MRA 25 **MRB 25**	36	70	23	23.5	29.5	24.5	81 103.4	45	40	30	14	60 79.4	57	M 8	6.8	7	11	11
MRA 35 **MRB 35**	48	100	34	33	40	32	109 136	62	52	40	19	80 103	82	M10	8.5	9	15	15
MRA 45 **MRB 45**	60	120	45	37.5	50	40	137.5 172.5	80	60	52.5	25	104 135	100	M12	10.5	14	20	18
MRA 55 **MRB 55**	70	140	53	43.5	57	48	163.5 205.5	95	70	60	29	120 162	116	M14	12.5	16	24	20
MRB 65	90	170	63	53.5	76	58	251	110	82	75	36.5	201	142	M16	14.5	18	26	23

* Lower tolerances on request

** When using additional wipers, metal wipers and lubrication plates, the total length L is increasing, see chapter 4.5.

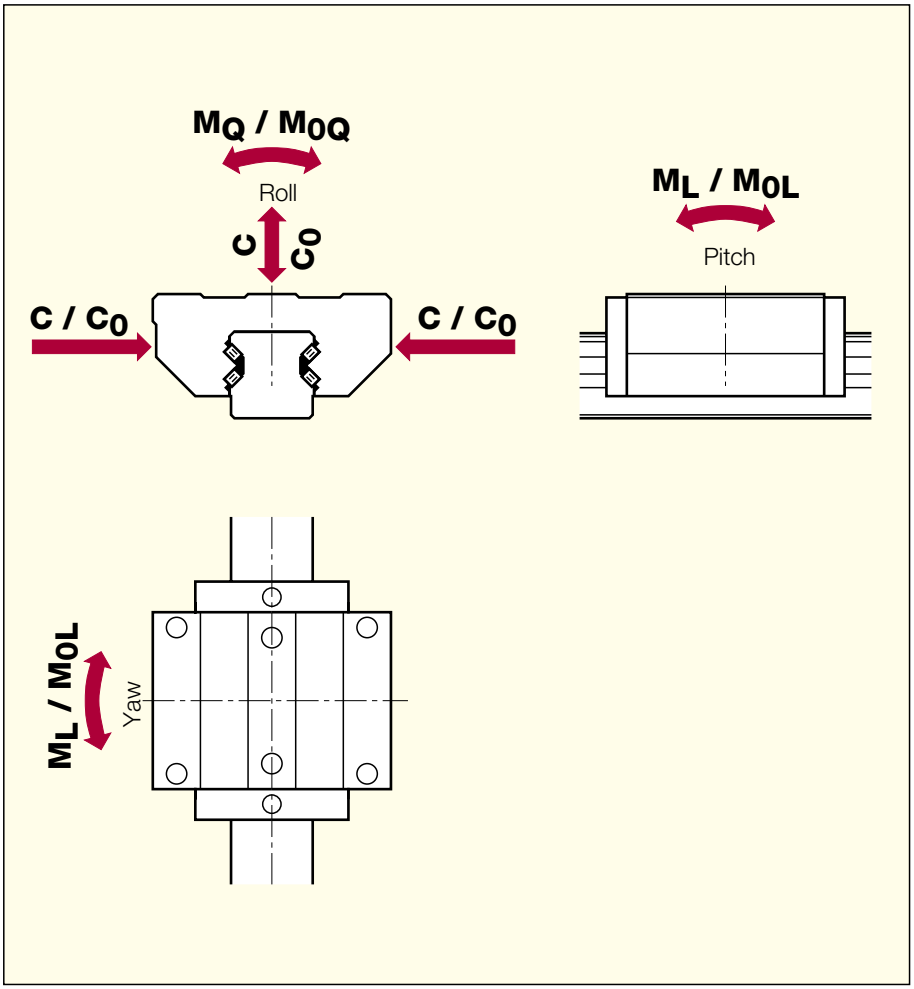

Roller ∅	g	g_1	g_2	m_1	o	P
3.2	9	6.5	13	5.5	7.5	17.5
4.5	12	10	15	7	8	23
5	15	11	21	8	10	30.5
6	18	13.5	26	9	12	34.5
7	23	19	32	13	15	51

Loading capacities C_0 (N)	C (N)	Moments M_{0Q} (Nm)	M_{0L} (Nm)	M_Q (Nm)	M_L (Nm)	Weights Carriage (kg)	Rail (kg/m)
49 800	27 700	733	476	408	265	0.7	3.4
70 300	39 100	1 035	936	576	521	1.0	
93 400	52 000	2 008	1 189	1 118	662	1.6	6.8
128 500	71 500	2 762	2 214	1 537	1 232	2.1	
167 500	93 400	4 621	2 790	2 577	1 556	3.1	10.7
229 500	127 800	6 333	5 161	3 527	2 874	4.1	
237 000	131 900	7 771	4 738	4 325	2 637	5.2	15.2
324 000	180 500	10 624	8 745	5 919	4 872	7.0	
530 000	295 000	20 912	17 930	11 640	9 980	13.2	22.2

C_0 = Static loading capacity
C = Dynamic loading capacity (100 km)
M_0 = Static moment capacity
M = Dynamic moment capacity (100 km)

4.3 Dimension tables, loading capacities MONORAIL MR

Carriage types MRC and MRD

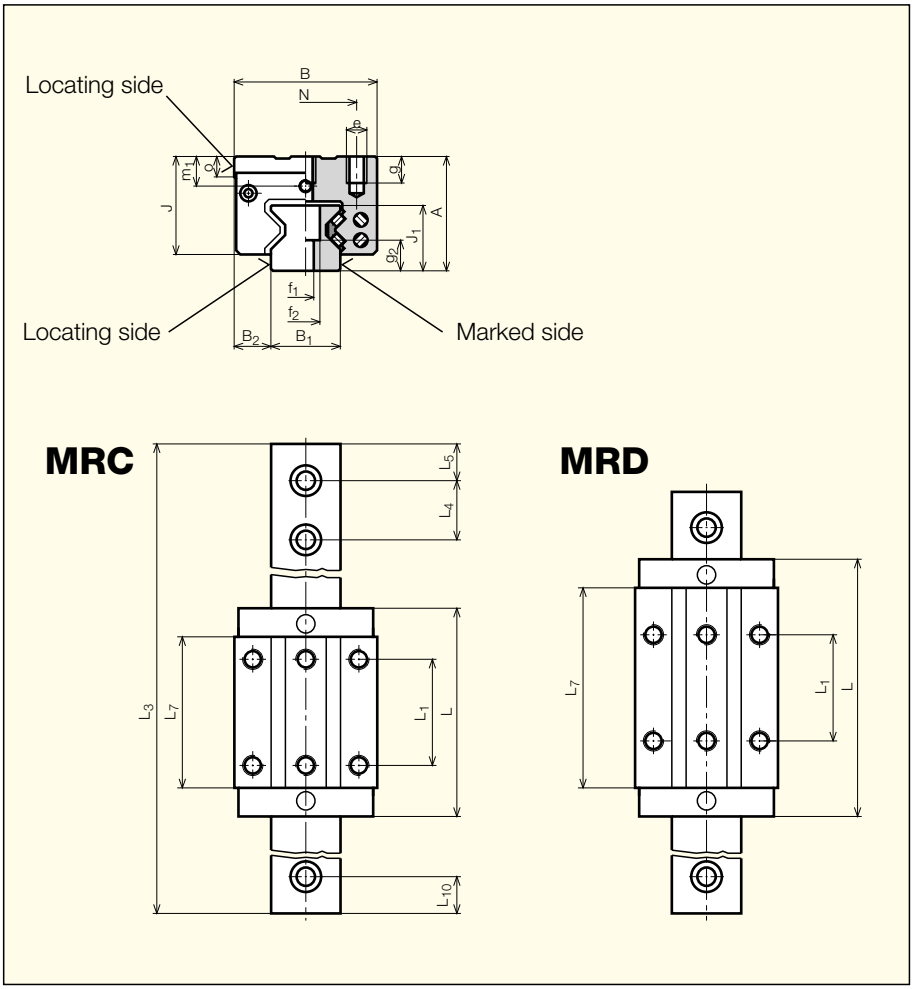

Drawings in dxf or dwg format are available on www.schneeberger.com in section Services.

Type	Dimensions (mm) A	B	B_1* ±0.05	B_2	J	J_1	L**	L_1	L_4	L_5/ L_{10}	L_7	N	e	f_1	f_2
MRC 25 **MRD 25**	40	48	23	12.5	33.5	24.5	81 103.4	35 50	30	14	57 79.4	35	M 6	7	11
MRC 35 **MRD 35**	55	70	34	18	47	32	109 136	50 72	40	19	76 103	50	M8	9	15
MRC 45 **MRD 45**	70	86	45	20.5	60	40	137.5 172.5	60 80	52.5	25	100 135	60	M10	14	20
MRC 55 **MRD 55**	80	100	53	23.5	67	48	163.5 205.5	75 95	60	29	120 162	75	M12	16	24
MRD 65	90	126	63	31.5	76	58	251	120	75	36.5	201	76	M16	18	26

* Lower tolerances on request

** When using additional wipers, metal wipers and lubrication plates, the total length L is increasing, see chapter 4.5.

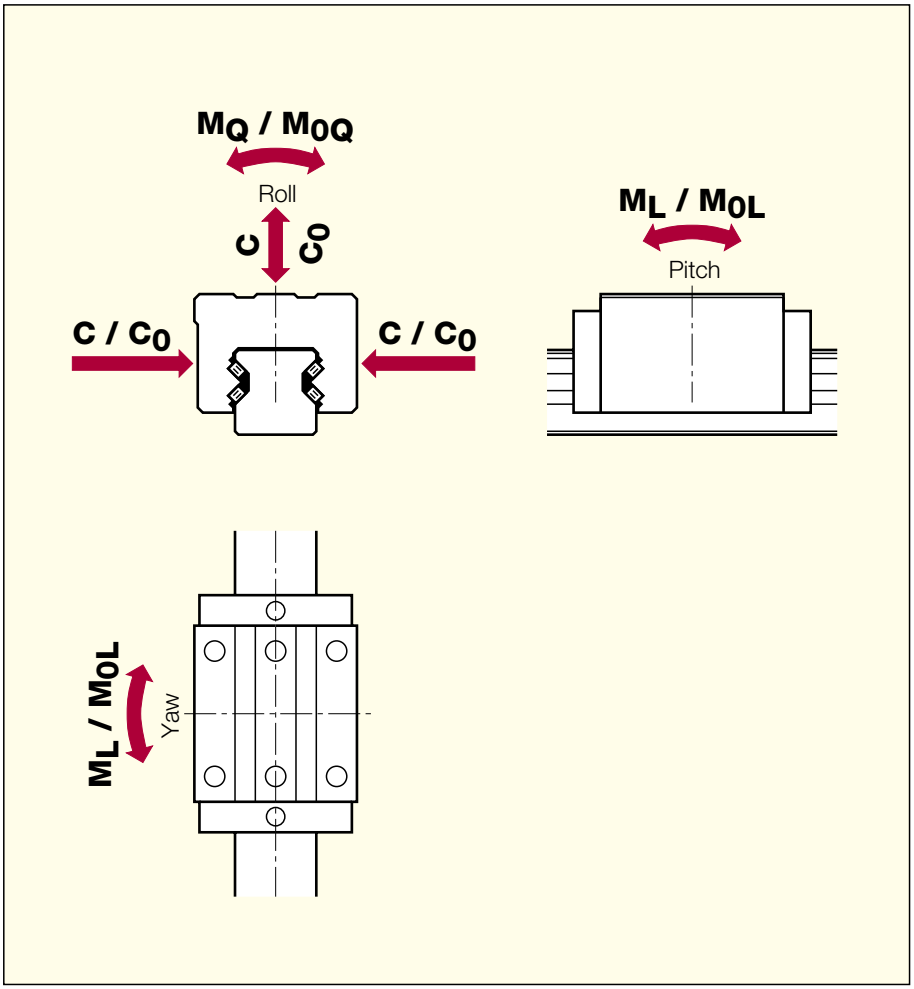

Roller ∅	g	g_2	m_1	o
3.2	9	13	9.5	7.5
4.5	12	15	14	8
5	18	21	18	10
6	19	26	19	12
7	20	32	13	15

Loading capacities C_0 (N)	C (N)	Moments M_{0Q} (Nm)	M_{0L} (Nm)	M_Q (Nm)	M_L (Nm)	Weights Carriage (kg)	Rail (kg/m)
49 800	27 700	733	476	408	265	0.6	3.4
70 300	39 100	1 035	936	576	521	0.85	
93 400	52 000	2 008	1 189	1 118	662	1.35	6.8
128 500	71 500	2 762	2 214	1 537	1 232	1.9	
167 500	93 400	4 621	2 790	2 577	1 556	3.0	10.7
229 500	127 800	6 333	5 161	3 527	2 874	4.1	
237 000	131 900	7 771	4 738	4 325	2 637	4.5	15.2
324 000	180 500	10 624	8 745	5 919	4 872	6.1	
530 000	295 000	20 912	17 930	11 640	9 980	10.3	22.2

C_0 = Static loading capacity
C = Dynamic loading capacity (100 km)
M_0 = Static moment capacity
M = Dynamic moment capacity (100 km)

4.4 Rigidity

The diagrams correspond to preload class V3

MRA 25, 35, 45, 55
MRC 25, 35, 45, 55

Compressive load

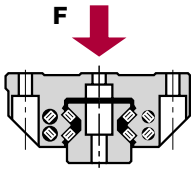

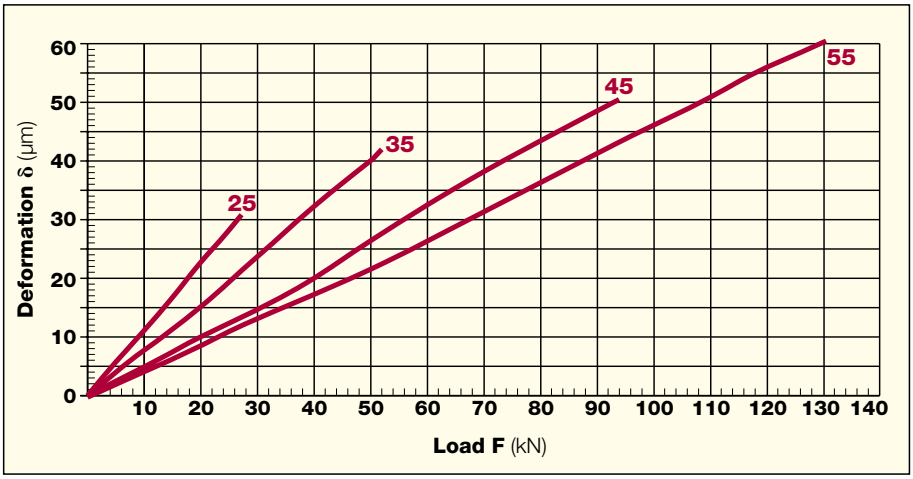

Tensile load

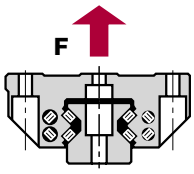

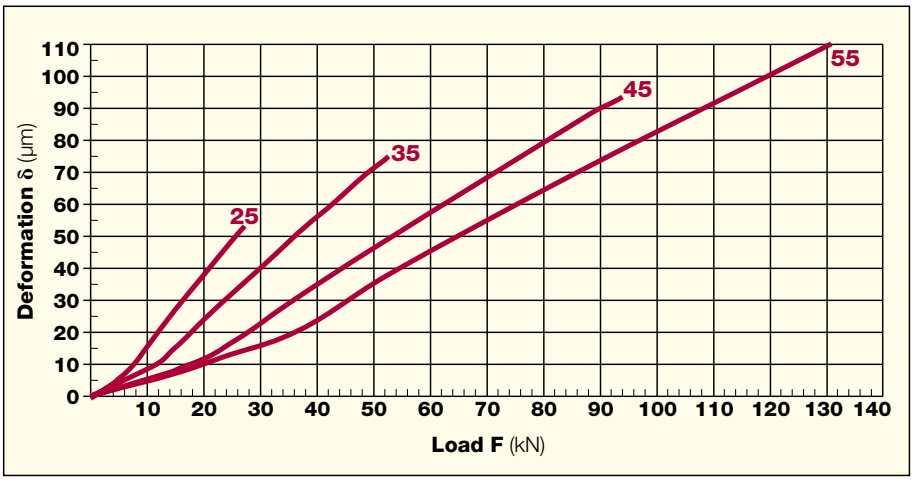

Lateral load

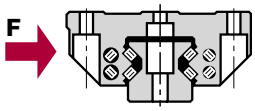

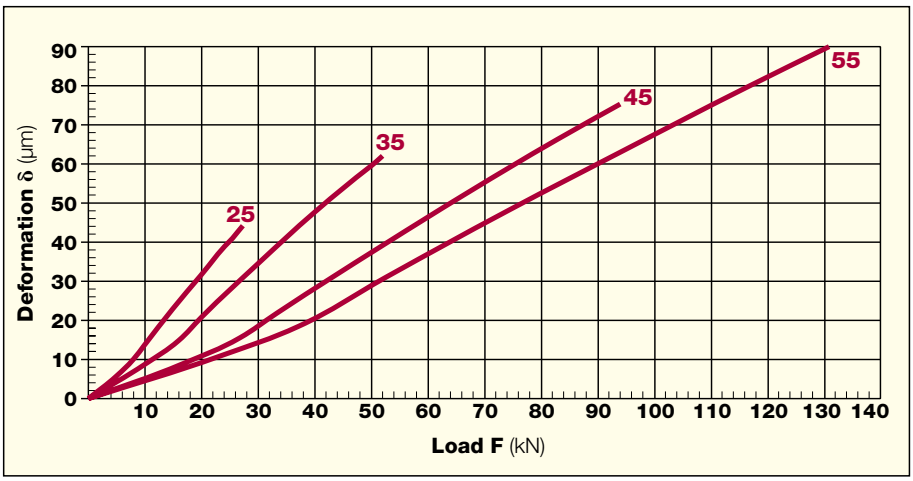

MRB 25, 35, 45, 55, 65
MRD 25, 35, 45, 55, 65

Compressive load

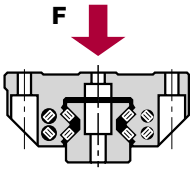

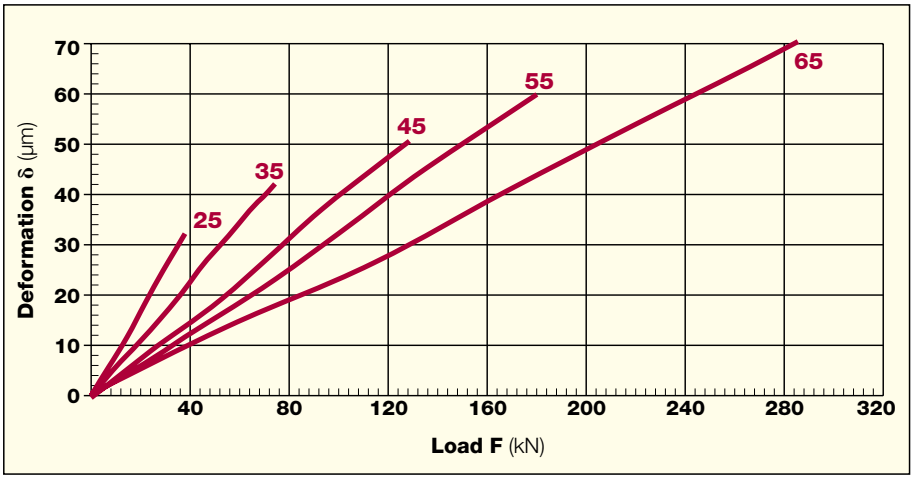

Tensile load

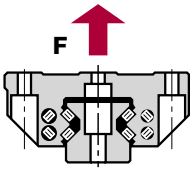

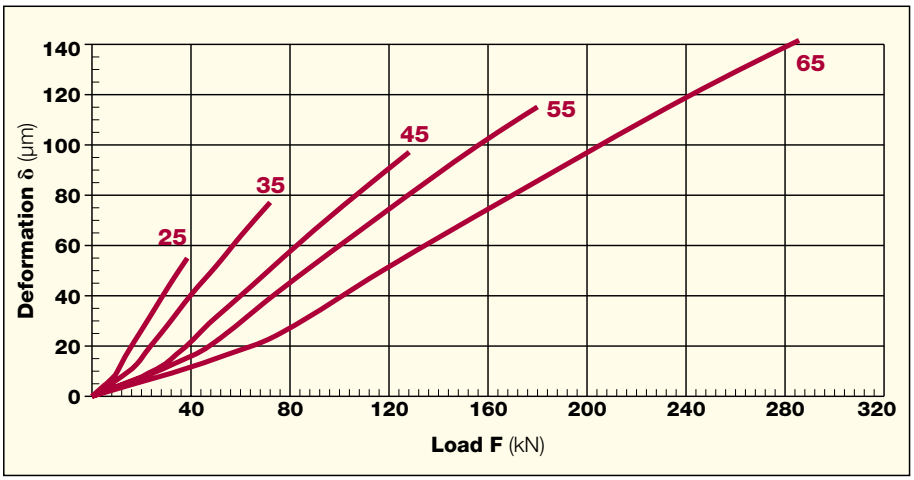

Lateral load

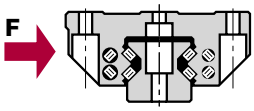

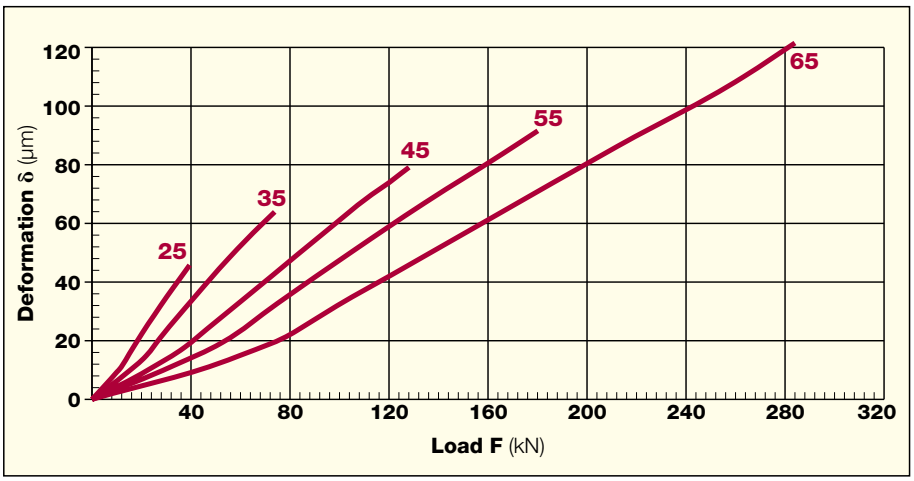

4.5 **Accessories** – must be ordered separately

Rail cover strip MAB

With the rail cover strip made of stainless spring steel a smooth rail surface is achieved, which enables the wipers to function optimally. The rail cover strip can be utilized in several pieces, i. e., without any limitation to the length of the rail and it is easy to install. As a result of the self-centering shape and the V-shaped ends, a lifting-off or shifting of the strip in any installation position is impossible. The maximum length of one piece amounts to 3 m.

NEW
Rail cover strip MAC
Pre-information

The new SCHNEEBERGER rail cover strip MAC combines technical functionality with easy handling and a corresponding aesthetic appearance. It provides the following advantages:

- Reliable functioning in all installation orientations due to a secure anchoring in a special groove.
- Utilization of the rail surface as reference surface through the edge zones remaining free.
- Protection of the wipers during the installation process by means of the rail bores being relocated inside the groove.
- Maximum one-piece cover strip length 6 m, applications using several pieces of cover strips can be implemented without any problem.

Your SCHNEEBERGER representative will inform you about the availability of this product.

Plastic plug MRK

Instead of the rail cover strip, plastic plugs can be used to close the rail attachment holes.

Brass plug MRS

Brass plugs are applicable for enhanced requirements regarding surface quality.

Two-piece steel plug MRZ

The two-piece steel plug, made of stainless steel, is ideal for applications where plastic or brass plugs are inadequate, i. e. in open chip areas. This plug guarantees leakproof sealing of the screw head space.

MRZ function: The seal ring (B) loosely fits into the counterbore. The tapered plug (A) expands the ring when inserted. The plug in its mounted position is flush with the rail and provides a smooth running surface for optimum wiper function and life.

Mounting tools are available. See ordering information in chapter 4.6.

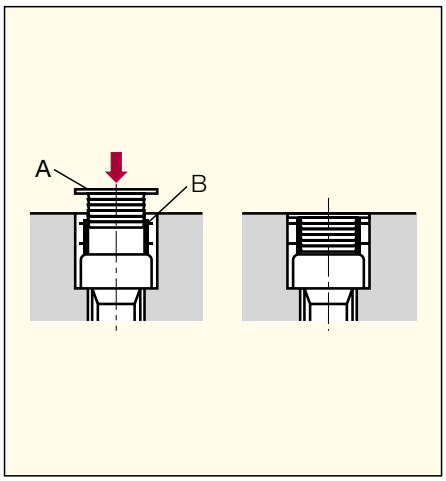

NEW
Additional wipers ZCN, ZCV
replace ZAN/ZAV available from autumn 2000

The ZCN and ZCV wipers provide effective additional protection of the guideways in heavily contaminated environments.
The new generation of additional wipers can be mounted directly over the rail cross section due to their flexibility. Two versions are available:

- ZCN made of NBR (Nitrile)
- ZCV made of Viton® (Fluoro-elastomer) for applications with aggressive coolants

These wipers ZCN/ZCV can also be used in combination with the metal wiper ASM.

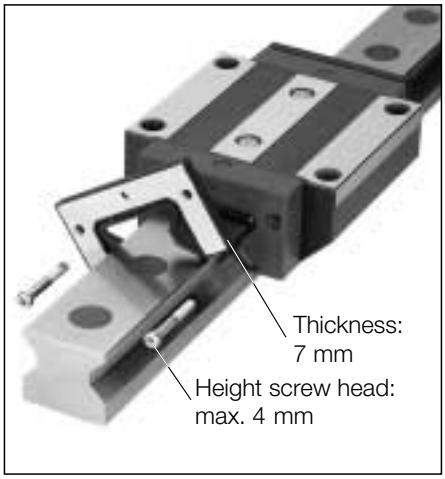

Metal wiper ASM

The metal wipers ASM serve for the protection of the sealing lips of carriages and additional wipers against hot metal chips. Large and loose dirt particles are pushed away and because of the large radial gap to the rail cannot get jammed. Metal wipers must not be utilized on rails with the measuring system AMS.
The metal wipers are ideally utilized in combination with additional wipers ZCN/ZCV.

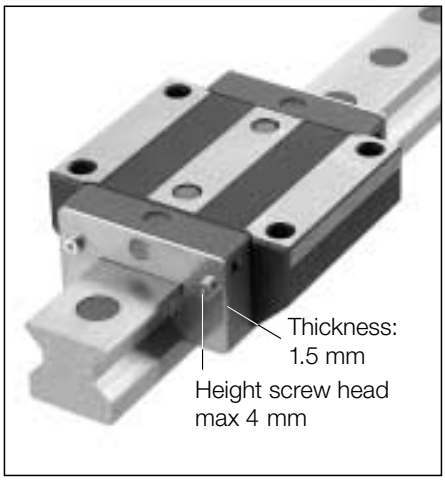

Bellows FBM

A standard bellows is available for all MONORAIL sizes. The bellows covers the entire length of the rail. The cross section is matched to the particular carriage size. The outside dimensions of the carriages are not exceeded by the bellows. The bellows is mainly used to provide additional protection against dust and splashed water. Installation is simple and requires little time. Retrofitting is only possible with induction heat treated rails since the rail ends have to be drilled for the attachment of the end plate EPL. The bellows is made of a synthetic fabric coated on both sides with polyurethane.

The ZPL adapter plate is required to attach the bellows to the carriage. The adapter plate is screwed to the front plate of the carriage. The EPL end plate can be screwed to the end face of the rail. The bellows is fastened with two rivets each to the adapter plate and front plate.
The required adapter and end plates, the attaching screws and rivets are supplied with the order of a complete bellow.

Bellows length calculation $L_b = L + 2 \cdot P$

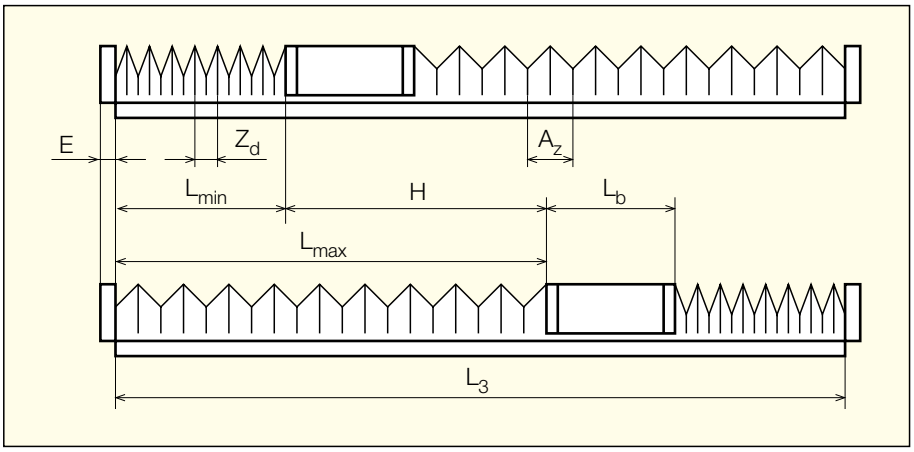

$L_b = 2 \cdot (L + 2 \cdot P) + L_w$

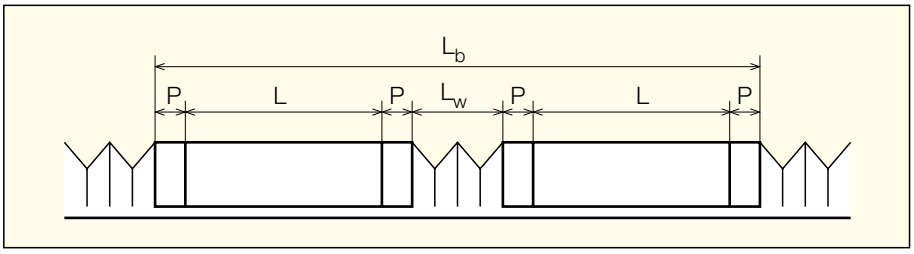

$L_{min} = n \cdot Z_d + 10$ $L_{max} = H + L_{min}$

$$n = \frac{H}{A_z - Z_d}$$ Round up to whole number

A_z	: Extension per fold	L_{max}	: Extended length of bellows
E	: End plate thickness	L_{min}	: Closed length of bellows
H	: Travel distance	L_w	: Clearance between two carriages
L	: Carriage length (chapter 4.2 or 4.3)	n	: Number of folds per bellows
L_b	: Total length with adapter plates	P	: Adapter plate thickness
L_3	: Rail length	Z_d	: Closed distance per fold

Size Dimensions in mm	**FBM 25**	**FBM 35**	**FBM 45**	**FBM 55**	**FBM 65**
A_Z	13	20	22	28	35
Z_d	2.5	2.5	2.5	2.5	2.5
E	8	8	8	8	8
P	12	12	12	12	12

Rail length calculation

$L_3 = L_{min} + L_{max} + L_b$

Adapter plate ZPL

The adapter plate is used for attaching the bellows to the carriage. The adapter plate is made of black-anodized aluminum. A special fastening screw is supplied with the adapter plate.

ZPL 35–65

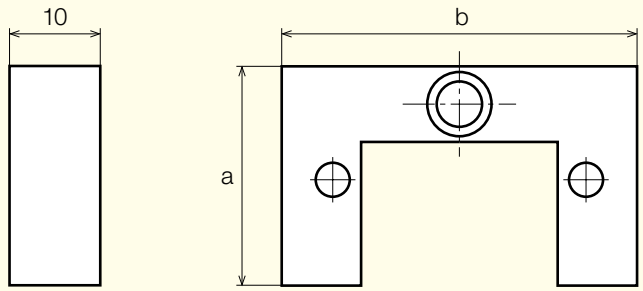

The adapter plate size 25 is used for attaching the bellows and also for the connection of a lateral lubrication.

ZPL 25

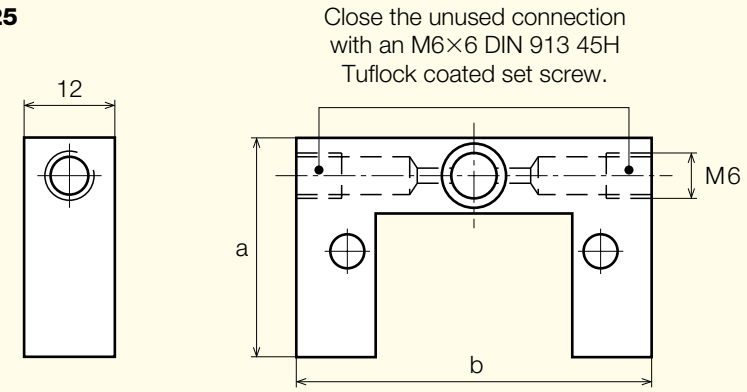

Size Dimension in mm	**ZPL 25**	**ZPL 35**	**ZPL 45**	**ZPL 55**	**ZPL 65**
a	29	39.5	49.5	56.5	75.5
b	47	68	84	98	123

End plate EPL

The end plate is used to attach the bellows to the end of the rail. The attaching holes can be drilled in the rail if the bellows is to be retrofitted.
The end plate is made of black-anodized aluminum and must be ordered separately if required. Both attaching screws are supplied with the end plate.
The external dimensions of the endplate correspond to the front plate, the bellows and the adapter plate.

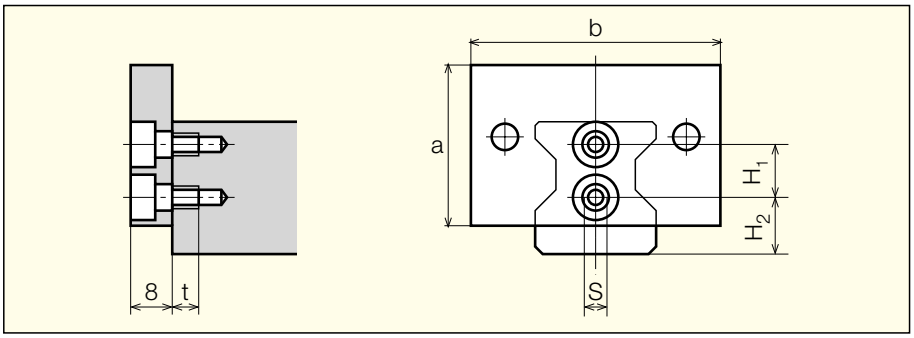

Size Dimension in mm	**EPL 25**	**EPL 35**	**EPL 45**	**EPL 55**	**EPL 65**
a	30	40	50	57	76
b	47	68	84	98	123
H_1	10	12	15	20	22
H_2	10.5	14	17	20	25
Sxt	M4×5	M4×5	M6×8.5	M6×8.5	M6×8.5

NEW
Lubrication plate SPL

The new lubrication plate SPL thanks to its integrated oil reservoir makes possible an automatic and uniform supply of lubricating oil to the roller elements over a long period of time. As a result, the investment – and operating costs can be significantly reduced. The advantages are:

- Assured supply of lubricant in any installation position
- Long lubrication intervals of up to 5000 km, resp. 12 months
- Can be refilled, in this context refer to chapter 3.6 Lubrication
- Cost saving due to the elimination of a central lubrication system
- Low burden on the environment because of the minimal consumption of lubricant

For maximum travelling distances without re-lubrication, the lubrication plates are always utilized in pairs. The lubrication plates have the same dimensions as the front plates of the carriages and are installed in front of these. Retro-fitting is possible. In case of applications, where coolant can come into contact with the guideways, additional wipers ZCN/ZCV have to be foreseen.

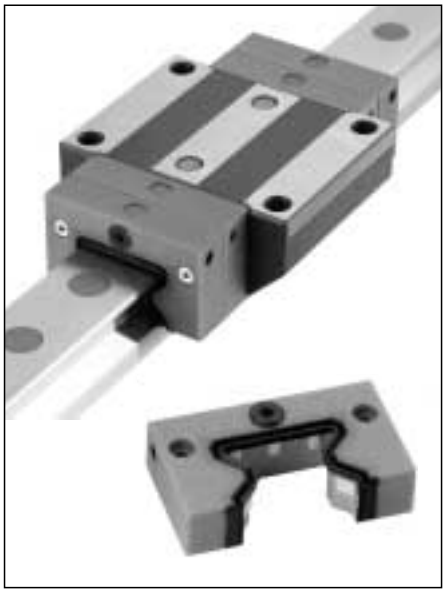

Assembly rail MRM

The assembly rail is required when the carriage must be removed from the rail and then reinstalled (chapter 9) during the installation of the MONORAIL. It is advisable to leave the assembly rail in the carriage to protect the rollers against contamination.
If necessary, the two internal screws for fastening the carriage can be tightened through the two holes in the assembly rail.
The assembly rail is made of plastic and available in two lengths, for standard carriages and for carriages with lubrication plates.

Front plate STP – spare part

The red front plates at the end sides of the MONORAIL carriages have two essential functions:

- Supply of lubricant and
- sealing the MONORAIL carriages.

Through several integrated lubrication connections, refer to chapter 4.6 Ordering Information, with the help of a lubricating nipple or by connection to a lubricating line lubricant can be supplied to the carriages, refer to chapter 3.6 Lubrication. Lubricating channels inside the front plate distribute the lubricant and guide it to the roller bodies.
The integrated double-lip cross wipers seal the carriage at the ends and with this prevent the ingress of dirt and the loss of lubricant. Because the cross wipers are subject to wear, the front plates have to be examined regularly and if necessary replaced, also refer to chapter 10, Precautionary Measures.

NEW
Brakes and clamps

SCHNEEBERGER for the most diverse application cases offers clamping – and braking elements for the roller guideway MONORAIL MR. The various alternatives can be utilized for applications like the securing of a position of linear axes, the clamping of machine tables and right to the application of a controllable counter-force in case of chip-removing processes.
Available are manual, pneumatic- and hydraulic-actuated products.
Versions opening when pressure is applied are optimally suitable for securing vertical axes or linear motor axes in case of an electric power failure.
For more detailed information, please contact your SCHNEEBERGER representative.

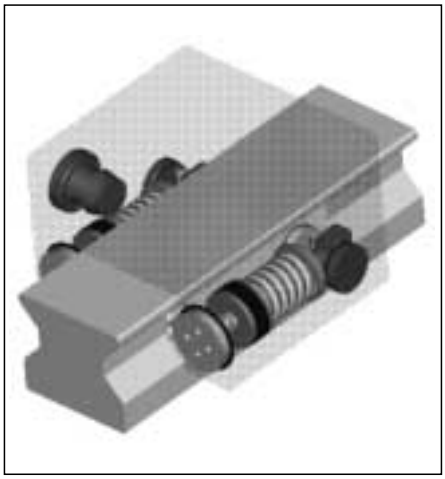

4.6 Ordering information MR

When custom MONORAIL MR versions are required, additional information is needed to ensure the correct execution of the order. This has to be marked on the supplementary order sheet:

- Type, accuracy class, preload in the event of different carriage types on a rail
- Additional wipers
- Locating sides of carriages and rails
- Position of lubrication connections or additionnal lubrication plates
- Installation orientation and type of lubrication

For orders with more than two rails, butt joint rails or rails with more than two carriages per rail a separate drawing is required, on which as well the lengths of all sections of multi-section rails and rail cover strips are indicated.

Guideway MONORAIL MR

__	MR	35	–C2	–0948	–A	–U	–D	–39	–29	–X	–G1	–V3	–GP	–SO	–A	–HH

Quantity		
Guideway type **MR**		
Size	**25, 35, 45, 55, 65**	
Carriage type Carriage qty	**A, B, C, D** **1, 2, ...**	When different carriages per rail e. g. –A2–B1
Rail length $\mathbf{L_3}$ (in mm).		State the total length for multi-section rails ground together.
AMS-measuring system*	**A**	Rail with integrated scale**
Rail version*	**U** **B**	Rails with tapped attachment holes at the bottom** Rail for cover strip MAB
Enhanced straightness*	**D**	Rail through hardened
Starting hole pitch $\mathbf{L_5}$ (in mm)		
End hole pitch $\mathbf{L_{10}}$ (in mm)		
Rail hole pitch $\mathbf{L_4}$ special*	**X** **Y**	doubled hole pitch (as BM) L_4 not standard or not uniform (drawing required)
Accuracy class	**G 0, G 1, G 2, G 3**	
Preload class	**V 1, V 2, V 3**	
Matched*	**GP**	
Lubrication connection not standard* Position has to be indicated on supplementary sheet	**SO** **SS** **SV** **ST**	above lateral (not size 25) front laterally (not size 25) special, 2 connections per carriage (not size 25)
Carriages with parallel locating sides*	**A**	carriage width B_A = (B–0.2) ± 0.05 mm
Hard-chroming*	**H** **HH**	only rails hard-chromed rails and carriages hard-chromed

* Optional specifications
For the measuring system AMS size 25, the specification rail execution **U is compulsory

Accessories MONORAIL MR – to be ordered separately

Rail cover strip

		__	MAB	35	–0948
Quantity					
Type	**MAB** (Steel cover strip)				
Size	**25, 35, 45, 55, 65**				
Rail length $\mathbf{L_3}$					

Plugs

		__	MRK	35
Quantity				
Type	**MRK** (plastic) **MRS** (brass) **MRZ** (steel, two piece)			
Size	**25, 35, 45, 55, 65**			

Mounting tool for two piece steel plug MRZ

			__	MWH	35
Quantity					
Type	**MWH** **MZH**	Sliding block with insertion tool Hydraulic cylinder (for all sizes)			
Size	**25, 35, 45, 55, 65**	(no specification for MZH)			

Additional wipers

		__	ZCN	35
Quantity				
Type	**ZCN** (NBR) **ZCV** (Viton)			
Size	**25, 35, 45, 55, 65**			

Metal wipers

		__	ASM	35
Quantity				
Type	**ASM**	not allowed with AMS rail		
Size	**25, 35, 45, 55, 65**			

Bellows

__	FBM	35	–24	–EZ

Quantity		
Type	**FBM**	
Size	**25, 35, 45, 55, 65**	
Number of folds		
Version	without specification	bellow only, without attachment plates
	EZ	with 1 endplate (EPL) and 1 adapter plate (ZPL) – For mounting to rail ends
	ZZ	with 2 adapter plates – For mounting between two carriages

Attachment plates for bellow

__	ZPL	35

Quantity			
Type	**ZPL**	Adapter plate	Included at order of
	EPL	End plate	a complete bellow
Size	**25, 35, 45, 55, 65**		

Lubrication plate

__	SPL	35	–MR

Quantity	only pair orders	
Type	**SPL**	
Size	**25, 35, 45, 55, 65**	
Version	**MR**	Roller guideway MONORAIL MR/MZ

Assembly rail

__	MRM	35	–SPL

Quantity		
Type	**MRM**	
Size	**25, 35, 45, 55, 65**	
Version	no indication	Standard version
	SPL	Long version for carriages with lubrication plate SPL

Front plate (Spare part)

__	STP	35	–SO

Quantity		
Type	**STP**	
Size	**25, 35, 45, 55, 65**	
Lubrication connection	no indication	Standard, M6 center front
	G 1/8	G 1/8 center front (not size 25, 35)
	SO-AB	from above, carriage type MRA/MRB
	SO-CD	from above, carriage type MRC/MRD
	SS*	lateral (not size 25)
	SV*	front lateral (not size 25)
	ST*	special, 2 × connections per carriage (not size 25)

* Order with indication of lubrication connection positions required.

Supplementary sheet for MR 25–65/Arrangement of carriages and accessories

Customer, Address	
Machine, axis	Drawing No. Customer
SCHNEEBERGER rep.	Drawing No. SCHNEEBERGER
Ordering information MONORAIL 1	
Ordering information MONORAIL 2	

MONORAIL 1

Type, Size | Type, Size

Wiper ASM, ZCN, ZCV

Lubrication SS, SV

FBM | FBM | FBM

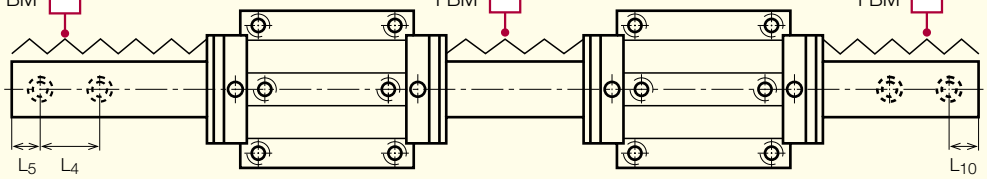

Lubrication

front laterally SV
laterally SS
above SO
front center SM

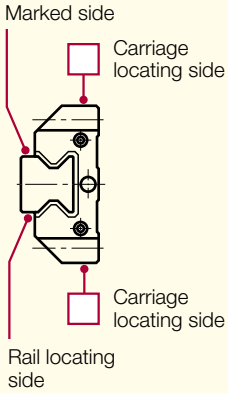

MONORAIL 2

Type, Size | Type, Size

ASM, ZCN, ZCV, SS, SV

FBM | FBM | FBM

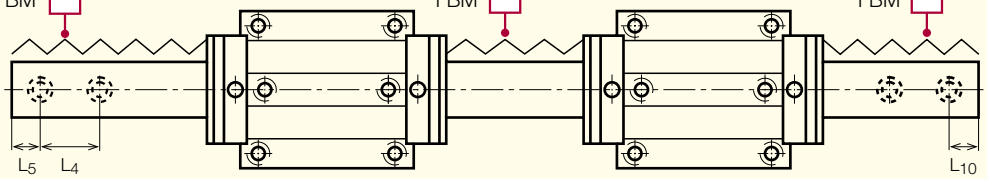

SV, SS, SO, SM

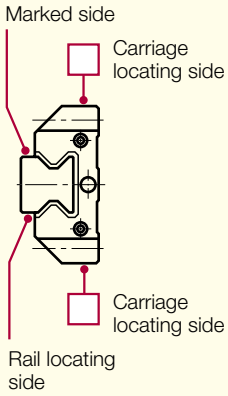

Mounting position

- ☐ standard (horizontal/vertical)
- ☐ special: turned ____° on longitudinal axis of the rail (Two connections per carriage are recommended with oil, sizes 35–65)

Lubrication Accessories

- ☐ Lubrication plate
- ☐ Lubricating nipples mounted

Attach

- ☐ from above
- ☐ from bottom (-U-)

Rail covering

- ☐ MRK
- ☐ MRS
- ☐ MRZ
- ☐ MAB

5.1 Product features

In the handling and automation industry increasing use is being made of linear guiding systems with additional features. The ever increasing cost pressure and quality demands on handling and automation systems in industrial applications are satisfied by SCHNEEBERGER MONORAIL MZ. The **MZ**, with integrated rack, offers the following decisive advantages:

- Extremely simple dimensioning and design of the connecting structure.
- Logical mounting of the guiderail and carriage systems.
- Optimal load-carrying capacity and service life based on the well-known MONORAIL machine guideway.
- Minimum servicing and maintenance as the design of the MONORAIL is conceived for industrial usage.
- Life and speed uncompromisingly match the user's requirements.

5.2 Dimension table, loading capacities MONORAIL MZ with carriage type MRE

Standard version

- MONORAIL carriage and track of the rail are hardened
- MONORAIL rails can be mounted continously
- Rack Teeth cut straight (as per DIN 867)
  Pressure angle 20°
  Milled to quality 8, unhardened
  Maximum accumulated pitch error for single unit rails: ± 0.06 mm per 1000 mm
- The running accuracy Δ of the carriages on the rail corresponds to accuracy class G3
- The preload class of the carriages corresponds to V1

Version MO

- Rail cross section same as MZ but without rack

On request

- Besides carriage type MRE, carriage types MRA, MRB, MRC and MRD can also be used
- Helical rack (single piece rails only)
- Special tooth pitch
- Rails of special length, maximum single piece rail length L_3 = 2400 mm

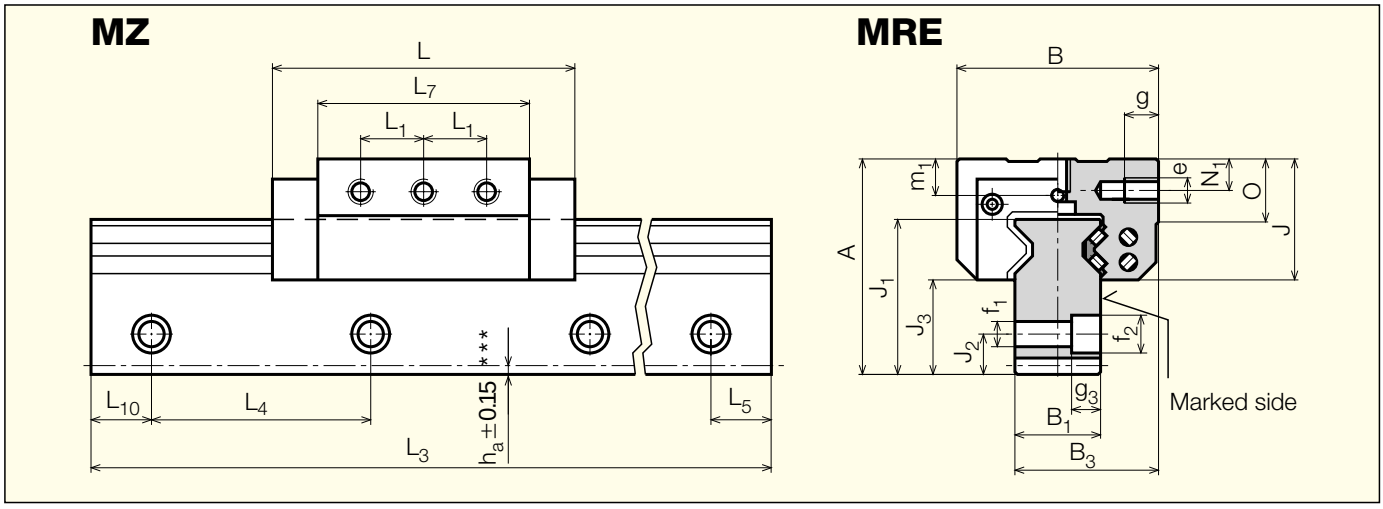

Type	Dimensions (mm) Linear pitch	A	B	B1* ±0.05	B2	B3	J	J1	J2	J3	L**	L1	L3	L4	L5/ L10	L7
MZ/MRE 25	**7.5**	**60**	**57**	**23**	–	**40**	**33.5**	**44.5**	**11.5**	**26.5**	**81**	**17.5**	**1500**	**60**	**30**	**57**
MR-X/MRC 25	–	**40**	**48**	**23**	**12.5**	–	**33.5**	**24.5**	–	–	**81**	**35**	**1500**	**60**	**30**	**57**
MZ/MRE 35	**10.0**	**85**	**76**	**34**	–	**55**	**47**	**62**	**17**	**38**	**109**	**25**	**1520**	**80**	**40**	**76**
MR-X/MRC 35	–	**55**	**70**	**34**	**18**	–	**47**	**32**	–	–	**109**	**50**	**1520**	**80**	**40**	**76**

* Lower tolerances on request
** When using additional wipers, metal wipers and lubrication plates, the total length L is increasing, see chapter 4.5.
*** Dimension h_a ≙ Module m, see chapter 5.4.

5.3 Dimension table, loading capacities MONORAIL MR-X with carriage type MRC

Standard version

- MONORAIL-rail with double hole spacing L_4
- The running accuracy Δ of the carriages on the rail corresponds to accuracy class G3
- The preload class of the carriages corresponds to V1

On request

- Also carriage types MRA, MRB, MRD and MRE can be used

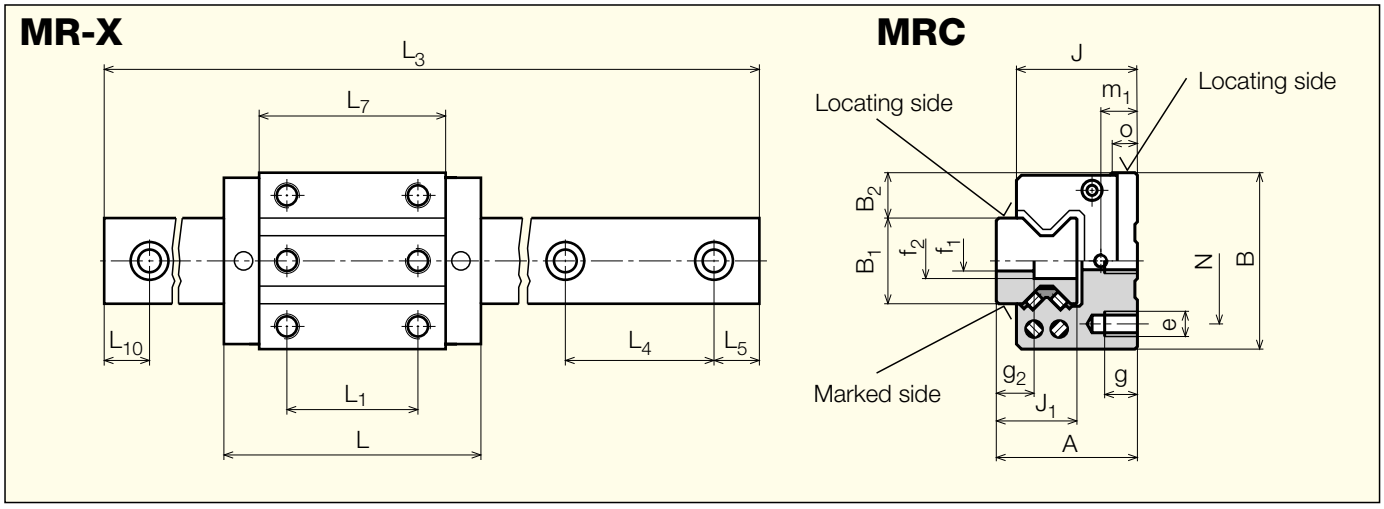

N	N_1	e	f_1	f_2	g	g_2	g_3	m_1	o	Roller ∅	Loading capacities* C_o (N)	C (N)	Max. rack load (N)	Weights Carriage (kg)	Rail (kg/m)
–	7.5	M 6	7	11	10	–	7	9.5	15	3.2	24 900	13 850	1800	0.75	7.0
35	–	M 6	7	11	9	13	–	9.5	7.5	3.2	24 900	13 850	1800	0.6	3.4
–	11	M 8	9	15	12	–	9	14	22	4.5	46 700	26 000	2500	1.6	14.8
50	–	M 8	9	15	12	15	–	14	8	4.5	46 700	26 000	2500	1.35	6.8

*Loading capacities reduced according to hole pitch

C = dynamic loading capacity (100 km)
C_o = static loading capacity

5.4 Accessories

For MONORAIL MZ the following accessories are available, see also chapter 4.5:

- Additional wipers ZCN/ZCV
- Metal wiper ASM
- Lubrication plate SPL
- Mounting rail MRM

Standard accessories

For the parallel rail MR-X the same accessories are available as for the standard MONORAIL MR.

Standard pinion MZR

- Toothing hardened and ground
- Quality 6 f 24 according to DIN 3962/3963/3967
- Straight bore for customized fitting to the motor shaft

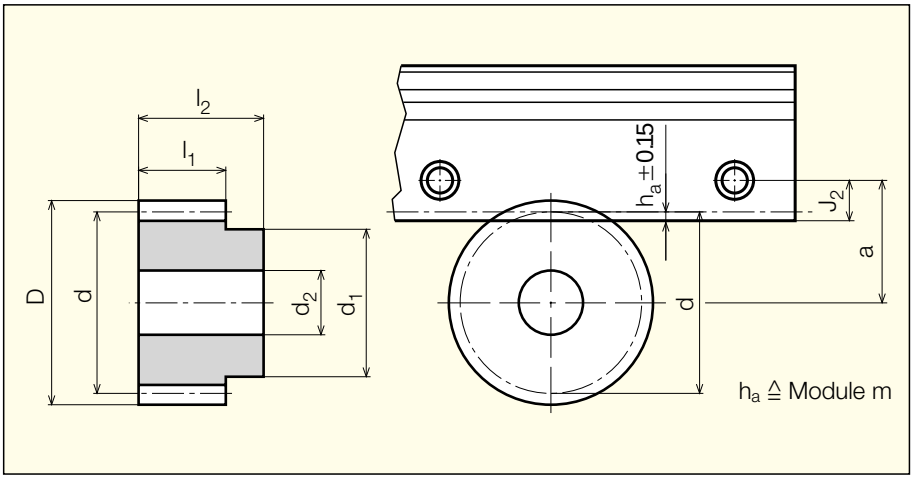

	Reference circle ∅ d	Module m	No of Teeth z	Pitch p	Dimensions (mm) a	D	d_1	d_2	l_1	l_2	Weight in kg
MZR 25	47.75	2.3873	20	7.5	33.0	52.52	40	15 h 7	19.5	30	0.34
MZR 35	63.66	3.1831	20	10	45.7	70.02	50	15 h 7	29.5	43	0.88

all dimensions in mm

Module $m = \frac{p}{\pi}$

Reference circle $\varnothing d = m \cdot z$

Attention:

- For systems with multi-section rails, a pinion with spring pre-load must be used due to the ± 0.15 mm tolerance of the dimension h_a.
- When mounting multi-section rails, the rail joints have to be adjusted according to section 9.6 of this catalog (Handling the rails).

5.5 Ordering information MZ

When custom MONORAIL MZ versions are required, additional information is needed to ensure the correct execution of the order. This has to be marked on the supplementary order sheet:

- Type, accuracy class, preload in the event of different carriage types on a rail
- Additional wipers
- Locating sides of carriages and rail
- Position of lubrication connections or additional lubrication plates
- Installation orientation and type of lubrication

In the case of more than 2 rails, butt joint rails or in the case of more than two carriages per rail, a separate drawing is required, on which as well the lengths of all sections of multi-section rails are indicated.

Guideway MONORAIL MZ

Quantity														
Guideway type	**MZ** **MO**	with rack without rack												
Size	**25, 35**													
Carriage type Carriage quantity	**E** (A, B, C, D) **1, 2, ...**	When different carriages per rail e. g. –A2–B1												
Rail length **L_3** (in mm).		State the total length for multi- section rails ground together.												
Starting hole pitch **L_5** (in mm)														
End hole pitch **L_{10}** (in mm)														
Hole pitch **L_4** special*	**X** **Y**	Half hole pitch (as MR) L_4 not standard or not uniform (drawing required)												
Accuracy class	**G3**													
Preload class	**V1**													
Lubrication connection not standard* Position has to be indicated on supplementary sheet		**SO** above **SS** lateral (not size 25) **SV** front laterally (not size 25) **ST** special, 2 connections per carriage (not size 25)												
Carriages with parallel locating sides*		**A** carriage width B_A = (B–0.2) ± 0.05 mm												

Order information for parallel guideway see chapter 4.6 MONORAIL MR

*Optional specifications

Supplementary sheet for MZ/MO 25–35/Arrangement of carriages and accessories

Customer, Address	
Machine, axis	Drawing No. Customer
SCHNEEBERGER-rep.	Drawing No. SCHNEEBERGER
Ordering information MONORAIL MZ/MO	
Ordering information MONORAIL MR-X	

MONORAIL MZ/MO

Type, Size | Type, Size

Wiper ASM ☐ ZCN ☐ ZCV ☐

Lubrication SS ☐ SV ☐

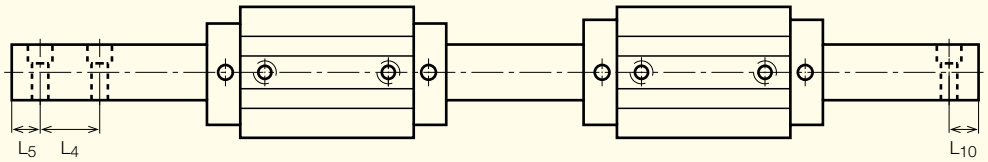

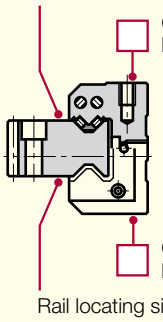

Lubrication

front laterally SV ☐
laterally SS ☐
above SO ☐
front center SM ☐

MONORAIL MR-X

Type, Size | Type, Size

Wiper ASM ☐ ZCN ☐ ZCV ☐

Lubrication SS ☐ SV ☐

FBM ☐ FBM ☐ FBM ☐

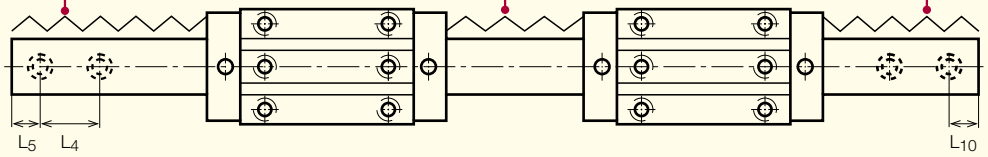

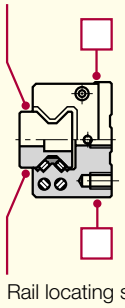

SV ☐
SS ☐
SO ☐
SM ☐

Mounting position

☐ standard (horizontal/vertical)
☐ special: turned ___° on longitudinal axis of the rail (Two connections per carriage are recommended with oil, size 35)

Lubrication Accessories

☐ Lubrication plate SPL
☐ Lubrication nipple mounted

Attach MR-X

☐ from above
☐ from bottom (-U-)

Rail covering MR-X

☐ MRK ☐ MRZ
☐ MRS ☐ MAB

6.1 Product features

SCHNEEBERGER develops and produces integrated distance measuring systems for MONORAIL roller guideways.
The technical level achieved sets standards with respect to economy, accuracy and reliability.
The AMS (Advanced Measuring System) represents the current technical state of the art and is primarily utilized in machine tools.
For various interfaces, powerful signal forming electronic systems are available from SCHNEEBERGER.

Reliable scanning technique

The measuring system is based on a magnetoresisitve sensor which scans the magnetic grating «t» of the scale. A relative motion between the scale and the sensor in the measuring direction causes periodic changes of resistance in response to changes in the magnetic flux vector. In order to identify the relatively small resistance changes and to compensate for temperature-related signal changes, several sensor elements are configured in a bridge.

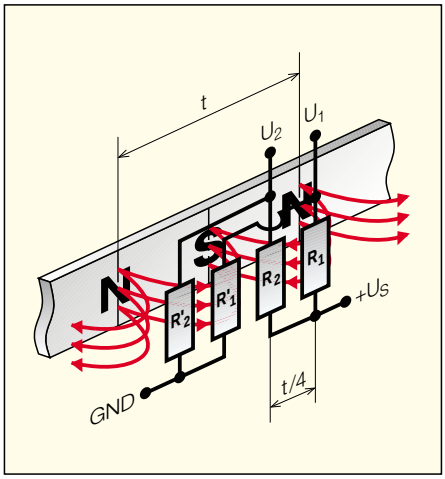

The new scanning electronic readhead

The system operates without requiring maintenance. The design of the scanning unit of the measuring head has been optimized to achieve the highest reliability.

- The single piece titanium scanning glider is prepared with a special finish selected for its wear resistance and its sliding characteristics.
- The newly developed MONORAIL AMS_A sensor chip was designed utilizing state of the art semiconductor technology. As a result, a significant increase in the reliability and signal quality has been achieved.
- The signals of the MONORAIL AMS_A are compatible with current NC control systems and technology. Either 1 V_{pp} or 11 μA_{pp} output signals are available.
  For control systems requiring a TTL input, an external electronic interpolation system (SMEa) is available.

Insensitive to contamination

For normal machine operating conditions this integrated measuring system is insensitive to oil, grease and coolant contamination. In especially dirty operating environments additional standard wipers ZAN/ ZAV are recommended.

Precise measuring standard

The magnetic grating and the reference marks are applied to a hard magnetic material rigidly connected to the rail. This material's thermal behavior corresponds to that of steel and gray iron.
In the measuring direction, the scale increments consist of consecutive north and south poles. The high coercive field strength of the scale material guarantees the magnetization of the poles.
The measuring standard is applied as the final step.

Scanning signals

The scanning signals consist of two sinusoidal signals and a reference mark. The signals are phase-shifted to each other by 90°. The signal period 360° corresponds to the grating period «t» of the scale.

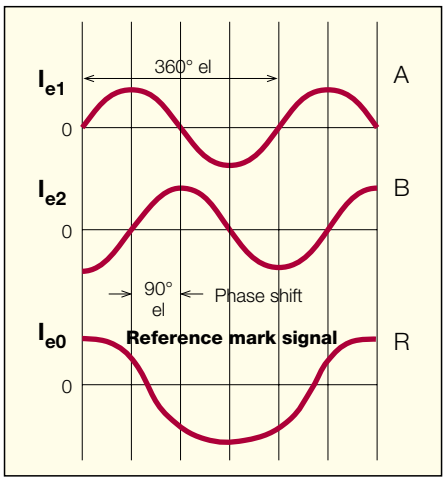

Digital interpolation electronics SMEa

The analog current signals of the scanning head are amplified and sent to a digital signal processor. This calculates the present position and from it the number of measuring steps covered. These are output as quadrature TTL signals. With an interpolation factor of 100, using edge detection, a measuring step of 1µm is achieved.
The interpolation electronics is available in two versions: voltage and current.

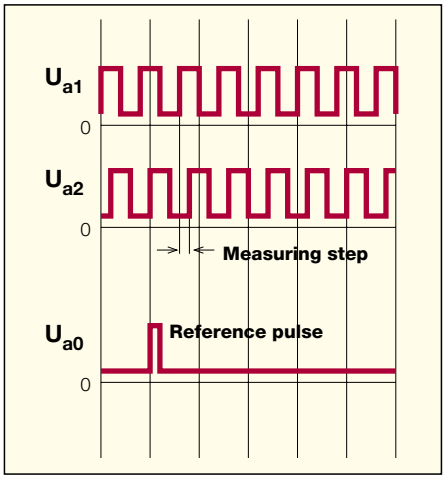

6.2 Technical data

MONORAIL AMS_A

Measuring standard Signal period Accuracy class	Hard-magnetic North/South gratings 400 µm (= grating period t) ± 5 µm/m at 20° C
Reference marks	every 50 mm
Measuring step	1 µm with SMEa, interpolation to 0.2 µm possible
Repeatability	± 1 measuring step
Interpolation error	± 1 µm
Max. traversing speed	3 m/s
Output signals Reference signal	sinusoidal, 90° phase-shifted current signals Ie_1, Ie_2: 7 to 16 μA_{pp} (1 kΩ load) voltage signals A, B: 0.6 to 1.2 V_{pp} (120 Ω load) current signals Ie_0: approx. 5.5 µA (usable component) voltage signals R: approx. 0.5 V (usable component)
Electrical connections	current signals 9 pins, voltage signals 12 pins cable 3 m with connector (standard) cable 0.3 m with mounting base and flange (optional)
Power supply	5 V ± 5%/50 mA
Protection (DIN 40050)	IP 64
Operating temperature	0 to 50° C
Max. rail length L_3	3000 mm

Measuring electronic SMEa

A detailed brochure is available for download at www.schneeberger.com in section Products/Measuring systems or contact your SCHNEEBERGER partner.

6.3 Dimensions

AMS_A 25

	Z ±1.5	L_7 MRA/ MRC	L_7 MRB/ MRD	L_8	L_9* MRA/ MRC	L_9* MRB/ MRD
25	203	57	79.4	12	149	171.4

Z = Distance to first reference mark
Further reference marks are spaced at 50 mm over measuring length

L_3, L_5 see chapter 4.2 and 4.3

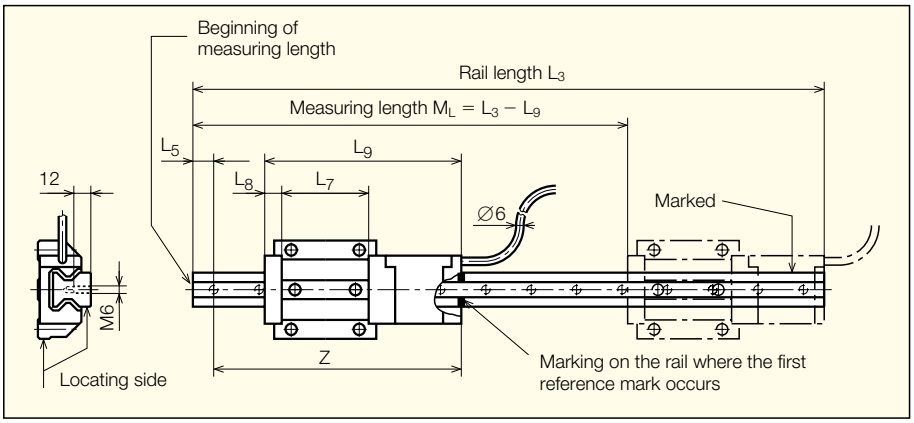

AMS_A 35, 45, 55, 65

	Z ±1.5	L_7 MRA/ MRC	L_7 MRB/ MRD	L_8	L_9* MRA/ MRC	L_9* MRB/ MRD
35	227	76	103	16.5	166.5	193.5
45	243	100	135	19	195	230
55	277	120	162	22	221	263
65	344	–	201	25	–	310

Z = Distance to first reference mark
Further reference marks are spaced at 50 mm over measuring length

L_3, L_5 see chapter 4.2 and 4.3

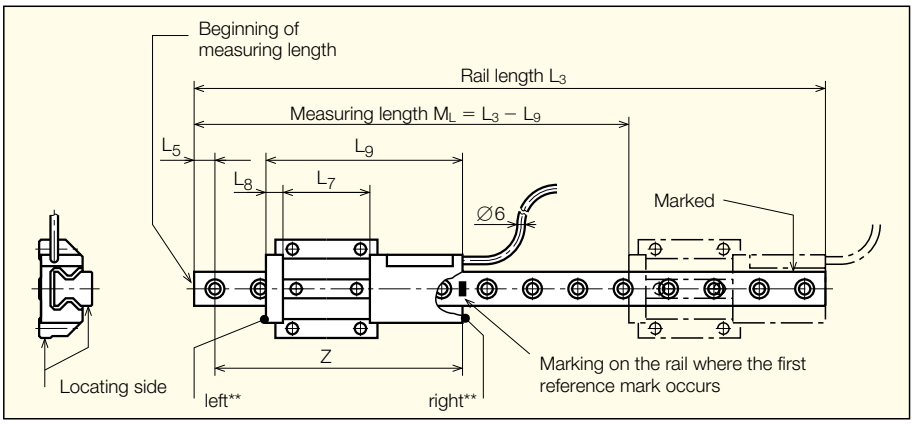

Mounting base with flange socket (male)

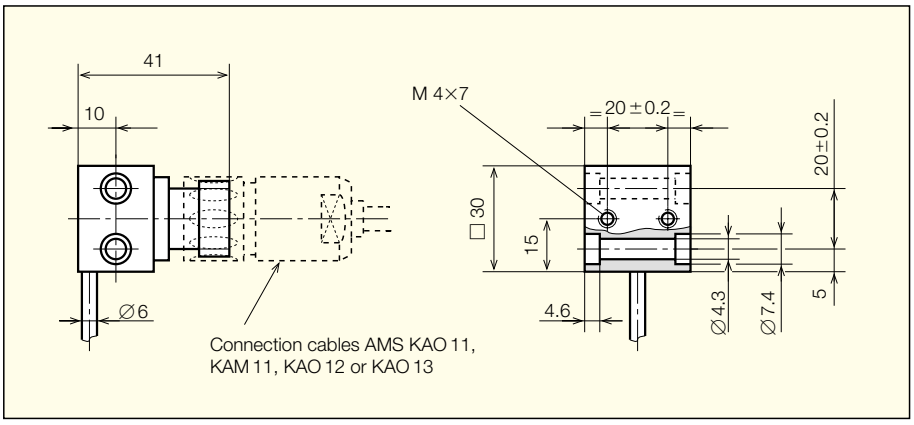

* When using additional wipers, the total length L_9 is increasing, see chapter 4.5.
** Only for orders of additional wipers AMS–LI and AMS–RE

Dimensions SMEa / Cable connections

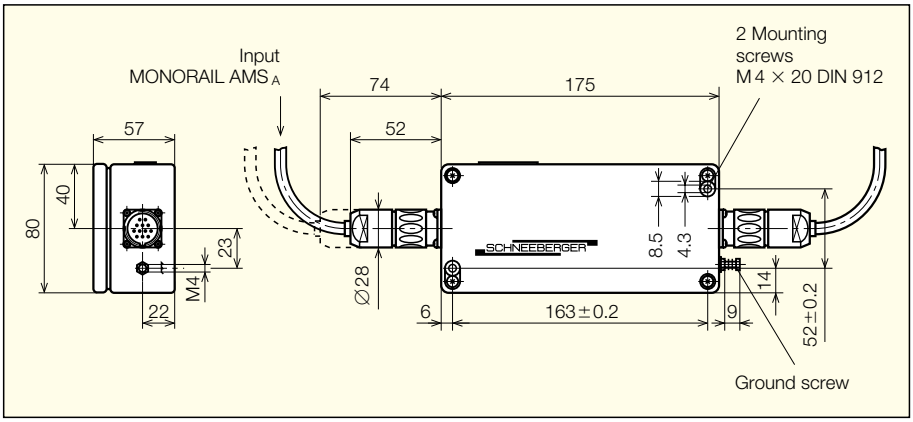

6.4 Ordering information MONORAIL MR with AMS

Orders for MONORAIL MR with AMS versions require additional information to ensure the correct execution of the order. Mark on the supplementary sheet:

- Position of scanning unit (ev. add special drawing)
- Type, accuracy class, preload in the event of different carriage types on a rail
- Additional wipers
- Locating sides of carriages and rails
- Position of the lubrication connections
- Installation orientation and type of lubrication

For orders with more than two rails, butt joint rails, rails with more than two carriages per rail or a different position of the scanning head as indicated in the supplementary sheet a separate drawing is required.

Guideway MONORAIL MR

Order information see chapter 4.6 for MONORAIL MR. The guideway with the integrated measuring system has to be indicated with an **A** in the ordering designation, for size 25 additionally with an **U** for rails with tapped attachment holes at the bottom.

Delivery content

The measuring system AMS contains, according to the following order designation, the scale on the rail, the scanning head and its housing. Other accessories have to be ordered separately.

Measuring system AMS

__	AMSA	35	–0948	–S	–I

Quantity		
Type	**AMS_A**	analog
Size	**25, 35, 45, 55, 65**	
Length of measuring system in mm (max. 3000 mm, according to max. single piece rails)		
Electrical connection	**S** **M**	Cable 3 m with connector Cable 0.3 m with mounting base and flange socket
Output signal	**U** **I**	Voltage output Current output

Accessories AMS – to be ordered separately

Interpolation electronics

__	SMEA	–I	–P	–S

Quantity		
Type	**SMEa**	
Interface	**U** **I**	Voltage input Current input
Voltage supply	**P** **D**	Type with «power sense» «DC-DC converter»
Configuration	**S** **K**	Standard configuration Custom configuration of interpolation rate, signal edge separation, reference pulse width

Extension/Connection cables

__	KAO 10	–5

Quantity		
Type	**KAO 10** **KAO 11** **KAO 12** **KAO 13** **KAO 14**	**KAM 10** **KAM 11**
Length in m	**1, 3, 5, 10, 15, 20**	(Longer lengths on request)

Scanning head (in case of replacement)

			__	SMA	35	–S	–I
Quantity							
Type	**SMA**	analog					
Size	**25, 35** (also for sizes 45, 55), **65**						
Electrical connection	**S** **M**	Cable 3 m with connector Cable 0.3 m with mounting base and flange socket					
Output signal	**U** **I**	Voltage interface Current interface					

Housing for scanning head

			__	AMS-GEH	–35
Quantity					
Type	**AMS-GEH**				
Size	**25, 35, 45, 55, 65**	Size 25 without lubrication connection			

Additional wipers

			__	ZAN	35	–AMS
Quantity						
Type	**ZAN** (NBR) **ZAV** (Viton)					
Size	**25, 35, 45, 55, 65**					
Version	**AMS*** **AMS-LI*** **AMS-RE*** **AMS-GEH***	for AMS-rail (only size 25) for AMS-rail, left version (only size 35) for AMS-rail, right version (only size 35) for AMS-housing				

Front plate (spare part)

			__	STP	25	–AMS
Quantity						
Type	**STP**					
Size	**25, 35**					
Version	**AMS*** **AMS-LI*** **AMS-RE***	for AMS rail (size 25 only) for AMS rail, left version (size 35 only) for AMS rail, right version (size 35 only)				
Lubrication connection	no indication **SO-AB** **SO-CD** **SS**** **SV**** **ST****	Standard, M6 center front from above, carriage type MRA/MRB from above, carriage type MRC/MRD lateral (size 35 only) front lateral (size 35 only) special, 2 × connections per carriage (size 35 only)				

* Special geometry of the sealing lips on the side of the magnetic scale, see also chapter 6.3
** Order with indication of lubrication connection positions required

Supplementary sheet for MR 25–65 with AMS/Arrangement of carriages and accessories

Customer, Address	
Machine, axis	Drawing No. Customer
SCHNEEBERGER-rep.	Drawing No. SCHNEEBERGER
Ordering information MONORAIL 1	
Ordering information MONORAIL 2	

MONORAIL 1

Type, Size | Type, Size

Wiper ZAN ZAV | ZAN ZAV

Lubrication SS SV

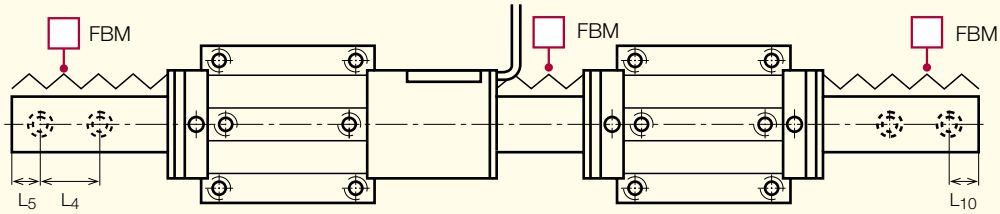

Lubrication

front laterally SV
laterally SS
above SO
front center SM | SM

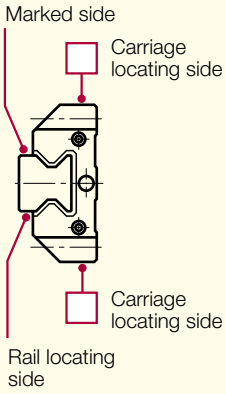

MONORAIL 2

Type, Size | Type, Size

ASM ZAN ZAV SS SV

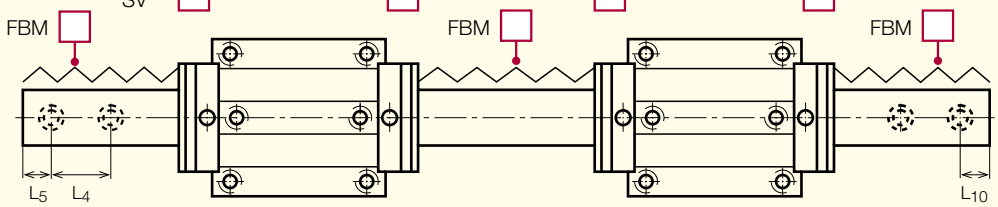

SV SS SO SM

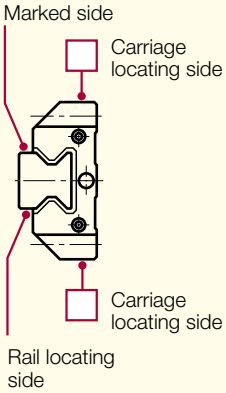

Mounting position

- standard (horizontal/vertical)
- special: turned ____° on longitudinal axis of the rail (Two connections per carriage are recommended with oil, size 35–65)

Lubrication/ Accessories

- Lubricating nipples mounted

Attach

- from above
- from bottom (-U-)

Rail covering

- MRK
- MRS
- MRZ
- MAB

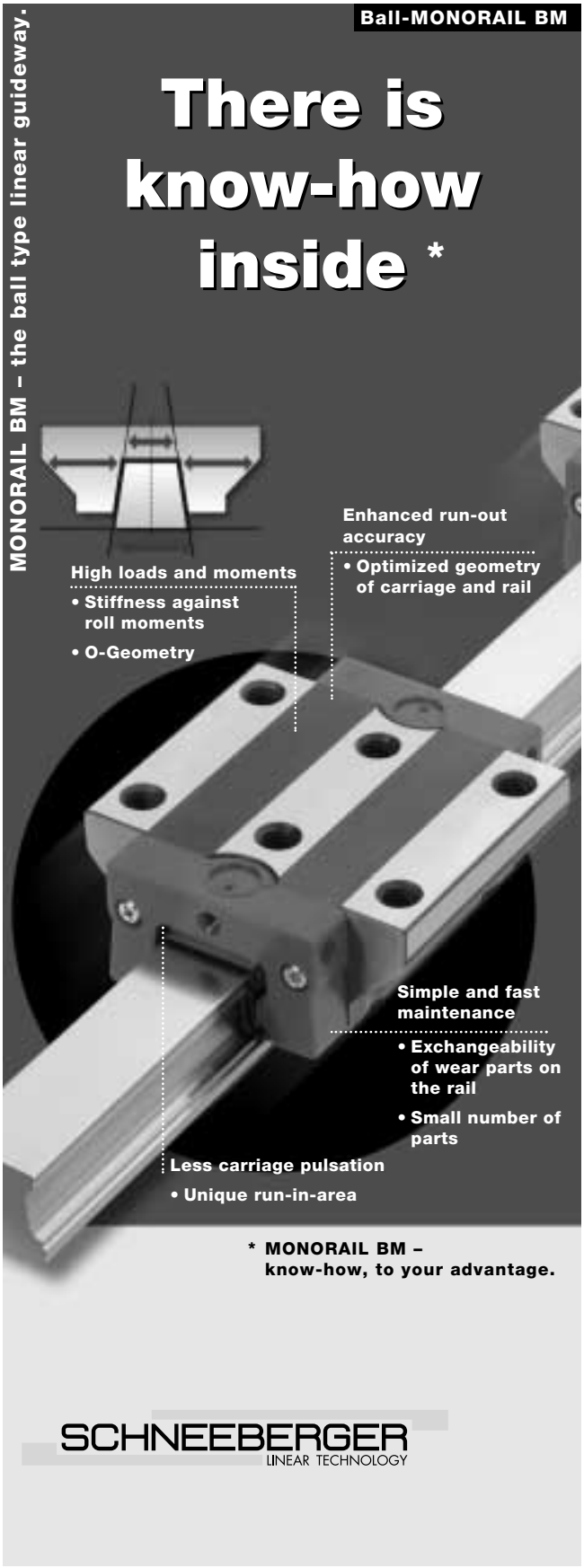
Ball-MONORAIL BM
There is know-how inside *
MONORAIL BM – the ball type linear guideway.
High loads and moments
• Stiffness against roll moments
• O-Geometry
Enhanced run-out accuracy
• Optimized geometry of carriage and rail
Simple and fast maintenance
• Exchangeability of wear parts on the rail
• Small number of parts
Less carriage pulsation
• Unique run-in-area
* MONORAIL BM – know-how, to your advantage.
SCHNEEBERGER
LINEAR TECHNOLOGY

SCHNEEBERGER
LINEAR TECHNOLOGY

7.1 Product features

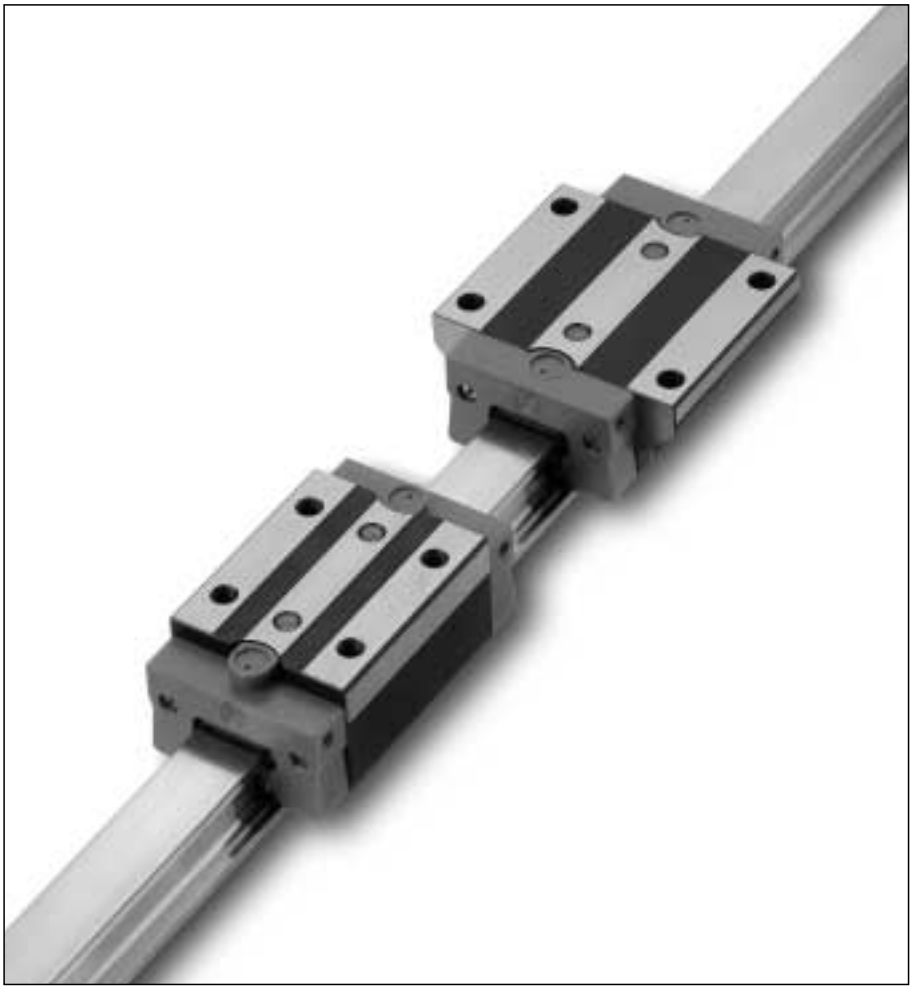

Very good dynamic characteristics and high economy are the distinguishing features of the Schneeberger ball type linear guideway MONORAIL BM. The novel design with few but optimally designed components, because the small number of transitions (joints) in the ball tracks makes outstanding running characteristics possible, which are distinguished by smooth running, little pulsation, low friction values and high travelling speeds. By means of the trapeze-shaped rail cross-section, a high rigidity of the guideway has been achieved and simultaneously the maintenance effort required significantly reduced, because parts subject to wear can be replaced without having to dismantle the guideway. The complete sealing of the carriages guarantees a high reliability in conjunction with a long service life. This robust guideway is therefore suitable for many and diverse applications and represents an ideal complement to the roller guideway MR.

Unique running characteristics

Special attention was focused on the run-in area of the balls from the unloaded to the loaded zone. This area was geometrically balanced in such a manner, that very smooth operation, minimum travel pulsation, pitch movement and noise, was achieved, in both low and high speed movements.

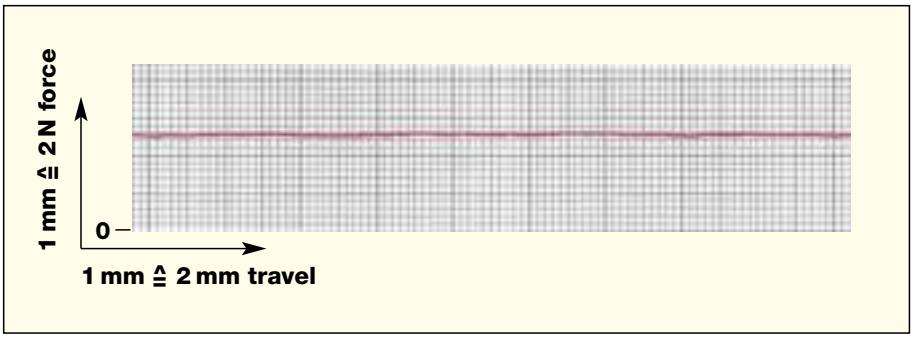

Completely sealed

The double-lip cross wiper seals as well as the additionally sealed gaps between the front plate and the steel body ensure an exceedingly effective seal and therefore a significant increase of the service life. The operational safety and reliability of the wiper seals is even more enhanced by the smooth rail surface when using the standard rail cover strip.

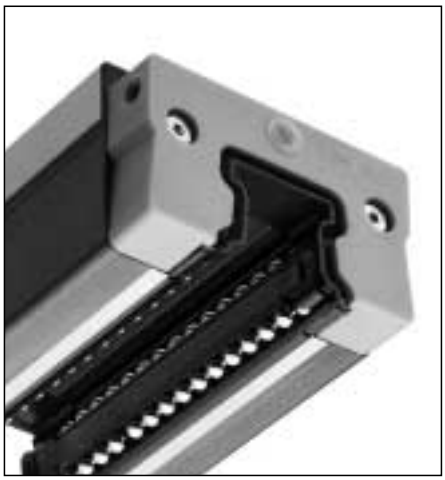

Balls retained

The robust construction is also clearly evident by the fact that the balls are securely held in the tracks of the carriage at all times. Therefore an assembly rail for installing or removing the carriage is not required, if carefully executed.

Optimized rail and carriage cross sections

Because of the trapezoidal rail profile, it was possible to optimize the carriage cross sections for the highest possible rigidity.
This rail profile enables easier servicing because the front plate, standard and additional wipers can be replaced without removing the carriage from the rail.

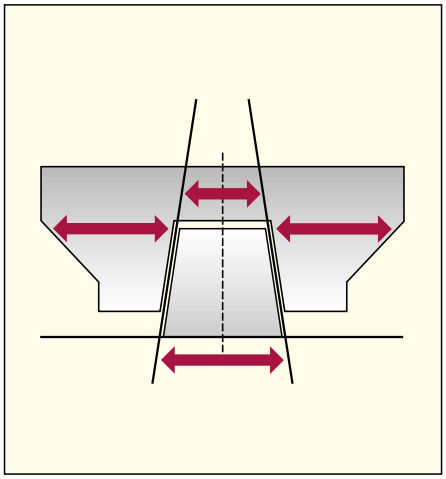

The highest precision with high rigidity

The MONORAIL BM is a modern, 4-row ball guideway. The balls make contact with each track at only two points, even under preload. As a result, the friction is reduced to a minimum and quiet, smooth running is achieved. Due to the selected ball arrangement, this guideway has a high load bearing capacity, equal in any direction.
Consequently, the MONORAIL BM can be used in a broad range of applications. The precision of the guideway corresponds to the high SCHNEEBERGER accuracy standard. Additional central mounting holes particularly when wide carriages are used yields an increased rigidity under tensile load.

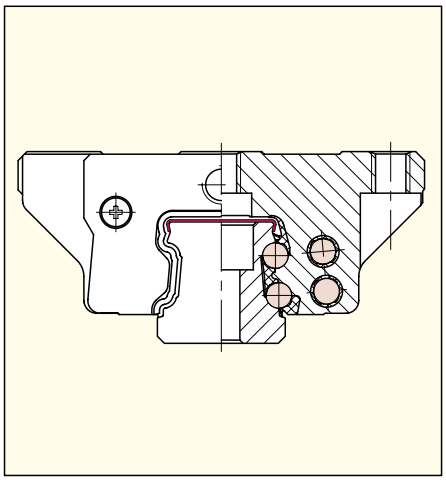

Versatile lubrication possibilities

The carriages can be lubricated through various lubrication connections (from the front, either side or above). The geometry of the lubrication channels, combined with efficient sealing, reduces lubricant consumption. This provides both economic and environmental benefits.

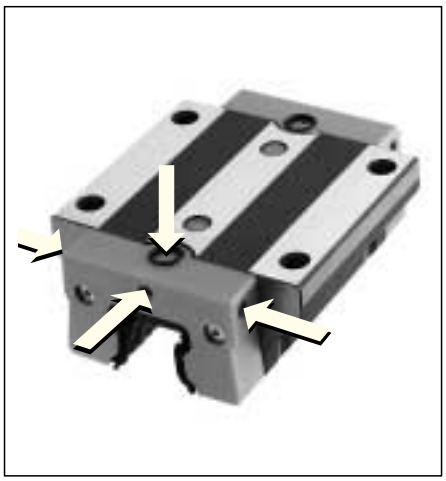

7.2 Dimension table, loading capacities MONORAIL BM

Carriage types BMA and BMB

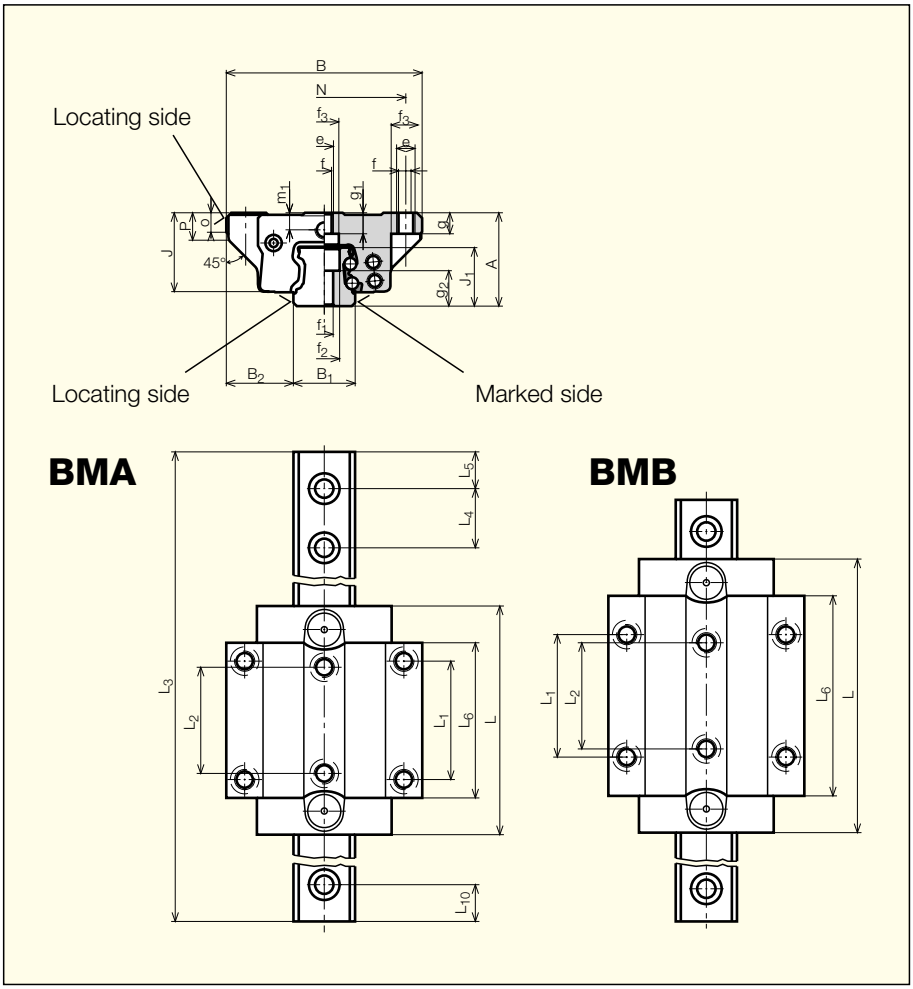

Drawings in dxf or dwg format are available on www.schneeberger.com in section Services.

Type	Dimensions (mm) A	B +0.4 0	B_1* ±0.05	B_2	J	J_1	L**	L_1	L_2	L_4	L_5/ L_{10}	L_6	N	e	f	f_1	f_2	f_3
BMA 15	24	47	15	16	20.2	15.7	59.8	30	26	60	29	42.8	38	M 5	4.4	4.5	8	7.5
BMA 20 **BMB 20**	30	63	20	21.5	25.5	19	75.5 91.5	40	35	60	29	53.5 69.5	53	M 6	5.4	5.8	10	9.5
BMA 25 **BMB 25**	36	70	23	23.5	30.5	22.7	89.3 108.3	45	40	60	29	64.3 83.3	57	M 8	6.8	7	11	11
BMA 30 **BMB 30**	42	90	28	31	35.9	26	103 125	52	44	80	39	75 97	72	M 10	8.5	9	15	15
BMA 35 **BMB 35**	48	100	34	33	41	29.5	118 143.5	62	52	80	39	86 111.5	82	M 10	8.5	9	15	15
BMA 45 **BMB 45**	60	120	45	37.5	50.8	37	145 176.5	80	60	105	51.5	107 138.5	100	M 12	10.5	14	20	18

* Lower tolerances on request

** When using additional wipers and metal wipers, the total length L is increasing, see chapter 7.5.

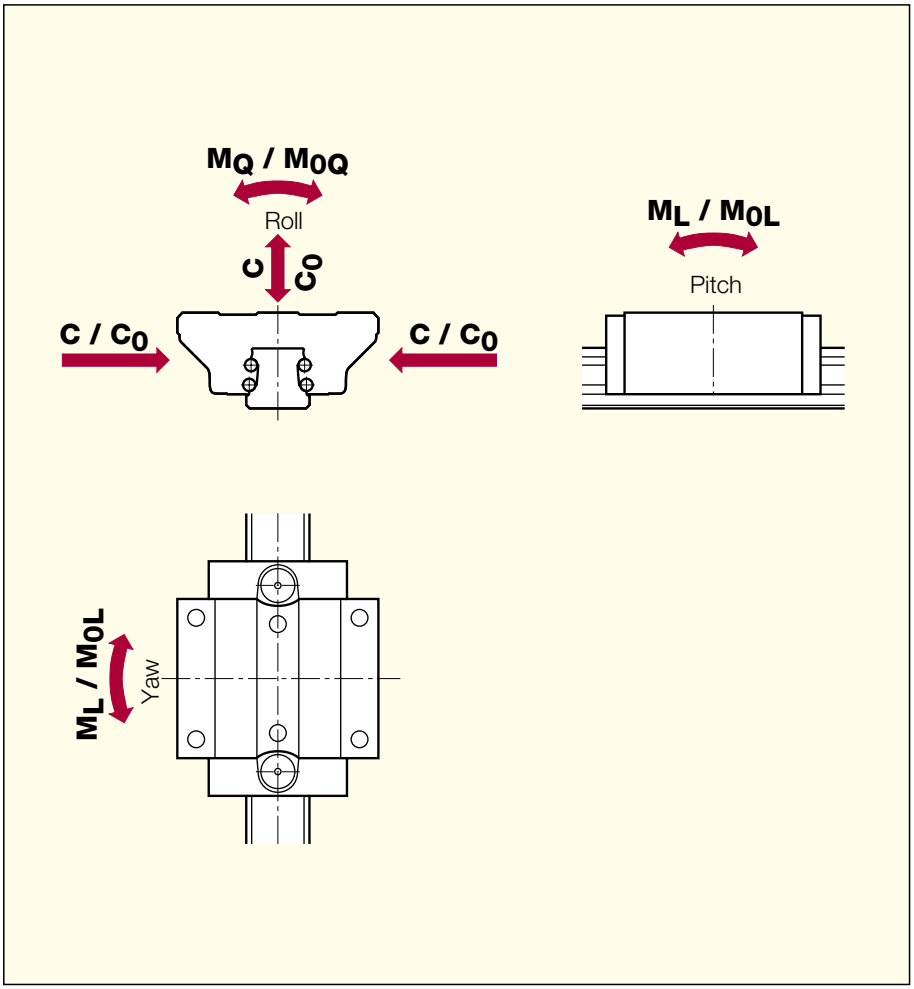

ball Ø	g	g_1	g_2	m_1	o	P
3.2	7	4.5	9.5	4	7	7
4.0	8	6.5	11.5	5.2	8	8
4.8	9	8	14	5.5	7	11
5.6	12	10	14.5	7	8	12
6.4	12	12	18	7	8	14
7.9	15	15	22	8	10	17.5

Loading capacities C_0 (N)	C (N)	Moments M_{0Q} (Nm)	M_{0L} (Nm)	M_Q (Nm)	M_L (Nm)	Weight Carriage (kg)	Rail (kg/m)
19 600	9 000	181	146	83	67	0.3	1.4
31 400	14 400	373	292	171	134	0.5	2.2
41 100	17 400	490	495	206	208	0.6	
46 100	21 100	631	513	289	235	0.7	3.0
60 300	25 500	825	863	349	365	0.9	
63 700	29 200	1 084	829	497	380	1.2	4.3
83 300	35 300	1 414	1 390	599	589	1.5	
84 400	38 700	1 566	1 252	718	574	1.8	5.4
110 300	46 700	2 048	2 104	867	891	2.3	
134 800	61 900	3 193	2 498	1 466	1 147	3.3	8.8
176 300	74 700	4 175	4 199	1 769	1 779	4.2	

C_0 = Static loading capacity
C = Dynamic loading capacity (100 km)
M_0 = Static moment capacity
M = Dynamic moment capacity (100 km)

7.3 Dimension table, loading capacities MONORAIL BM

Carriage types BMC and BMD

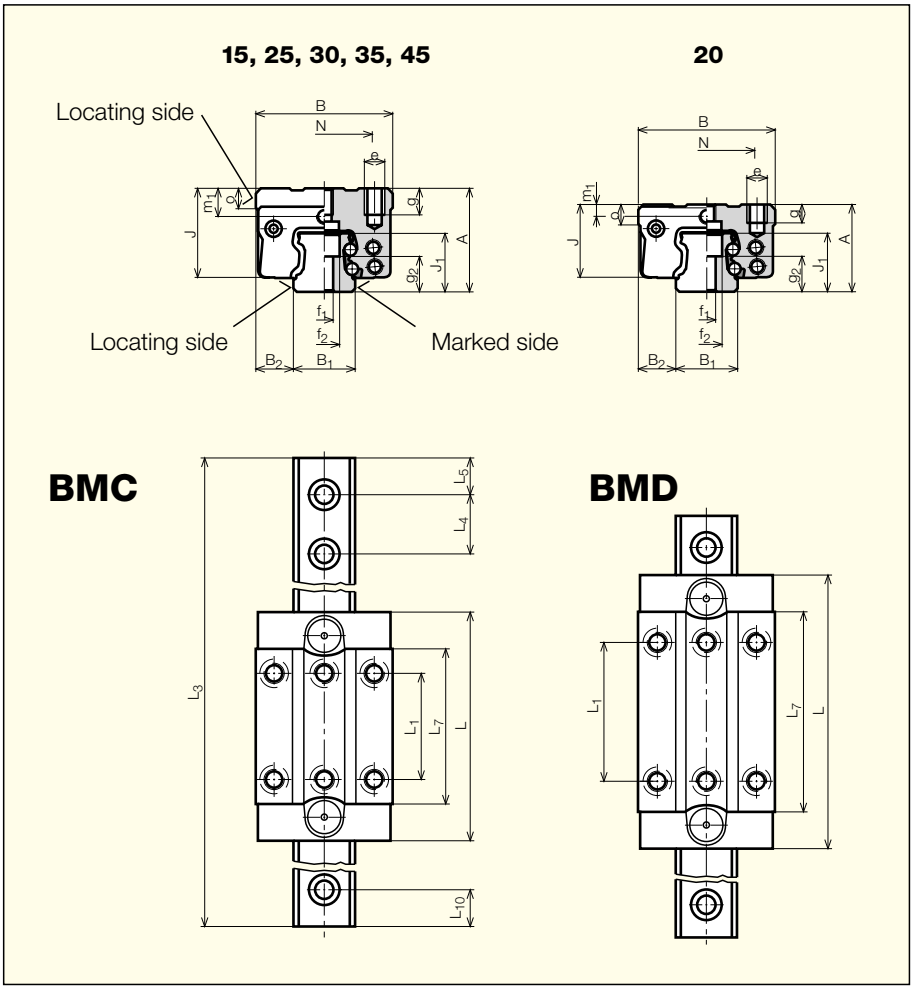

Drawings in dxf or dwg format are available on www.schneeberger.com in section Services.

Type	Dimensions (mm) A	B +0.4 0	B_1* ±0.05	B_2	J	J_1	L**	L_1	L_4	L_5/ L_{10}	L_7	N	e	f_1
BMC 15	28	34	15	9.5	24.2	15.7	59.8	26	60	29	42.8	26	M 4	4.5
BMC 20 **BMD 20**	30	44	20	12	25.5	19	75.5 91.5	36 50	60	29	53.5 69.5	32	M 5	5.8
BMC 25 **BMD 25**	40	48	23	12.5	34.5	22.7	89.3 108.3	35 50	60	29	64.3 83.3	35	M 6	7
BMC 30 **BMD 30**	45	60	28	16	38.9	26	103 125	40 60	80	39	75 97	40	M 8	9
BMC 35 **BMD 35**	55	70	34	18	48	29.5	118 143.5	50 72	80	39	86 111.5	50	M 8	9
BMC 45 **BMD 45**	70	86	45	20.5	60.8	37	145 176.5	60 80	105	51.5	107 138.5	60	M 10	14

* Lower tolerances on request

** When using additional wipers and metal wipers, the total length L is increasing, see chapter 7.4.

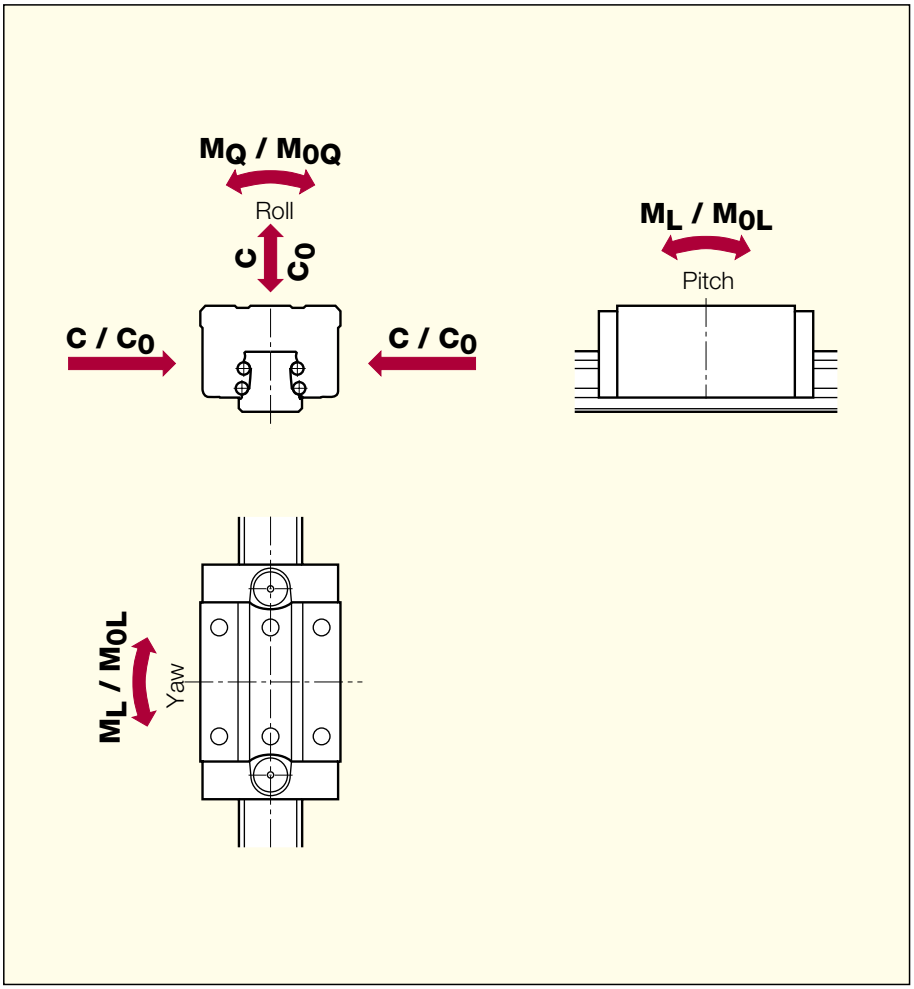

	f_2	ball ∅	g	g_2	m_1	o	Loading capacities C_0 (N)	C (N)	Moments M_{0Q} (Nm)	M_{0L} (Nm)	M_Q (Nm)	M_L (Nm)	Weight Carriage (kg)	Rail (kg/m)
	8	3.2	6	9.5	8	6	19 600	9 000	181	146	83	67	0.3	1.4
	10	4.0	7	11.5	5.2	6	31 400	14 400	373	292	171	134	0.4	2.2
							41 100	17 400	490	495	206	208	0.5	
	11	4.8	9	14	9.5	11	46 100	21 100	631	513	289	235	0.7	3.0
							60 300	25 500	825	863	349	365	0.8	
	15	5.6	11	14.5	10	11	63 700	29 200	1 084	829	497	380	1.0	4.3
							83 300	35 300	1 414	1 390	599	589	1.3	
	15	6.4	12	18	14	15	84 400	38 700	1 566	1 252	718	574	1.8	5.4
							110 300	46 700	2 048	2 104	867	891	2.3	
	20	7.9	18	22	18	19	134 800	61 900	3 193	2 498	1 466	1 147	3.4	8.8
							176 300	74 700	4 175	4 199	1 769	1 779	4.3	

C_0 = Static loading capacity
C = Dynamic loading capacity (100 km)
M_0 = Static moment capacity
M = Dynamic moment capacity (100 km)

7.4 Rigidity

The diagrams correspond to preload class V3

BMA 15, 20, 25, 30, 35, 45
BMC 15, 20, 25, 30, 35, 45

Compressive load

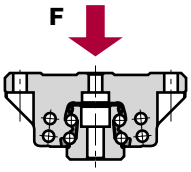

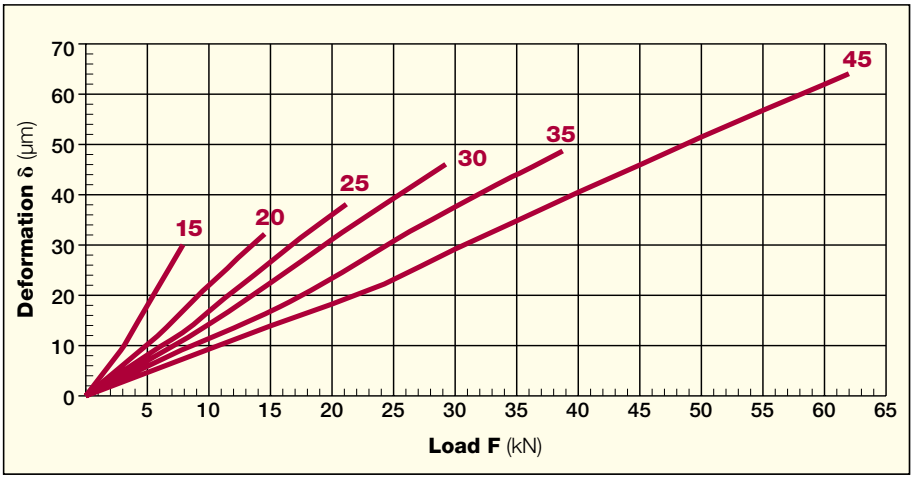

Tensile load

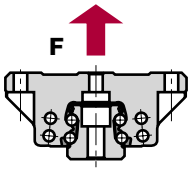

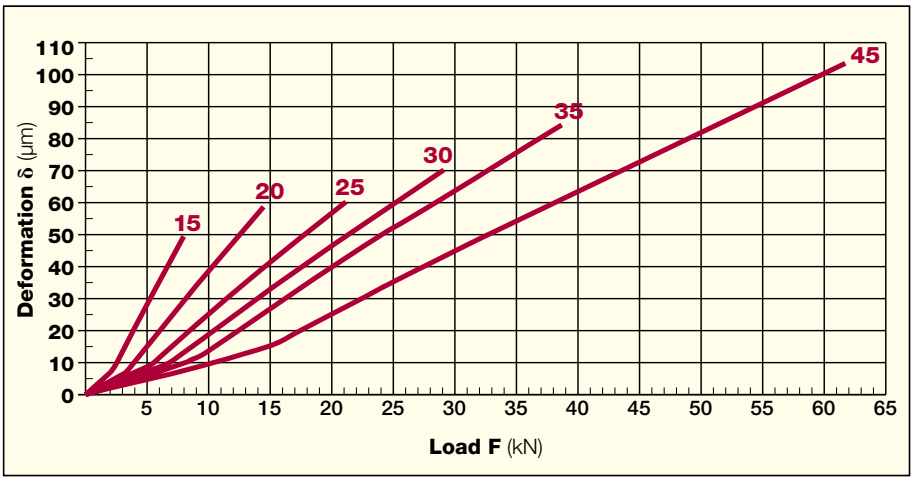

Lateral load

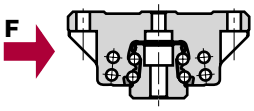

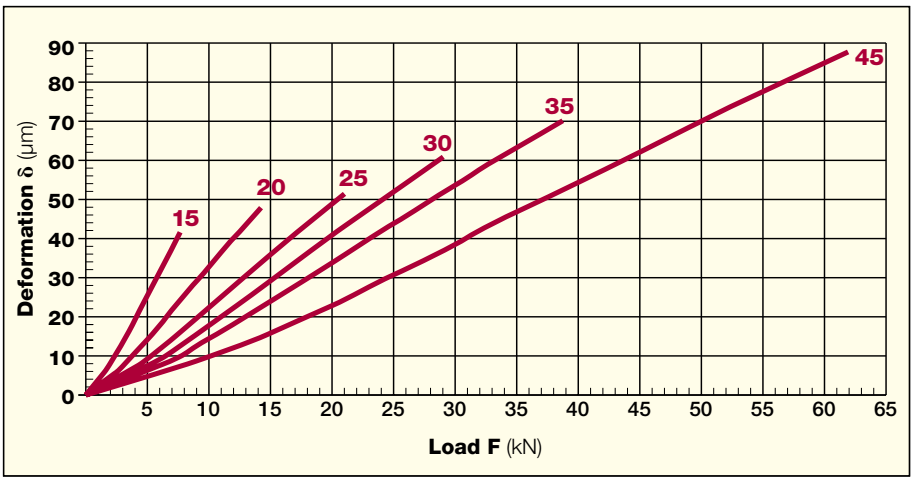

BMB 20, 25, 30, 35, 45
BMD 20, 25, 30, 35, 45

Compressive load

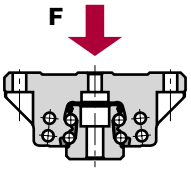

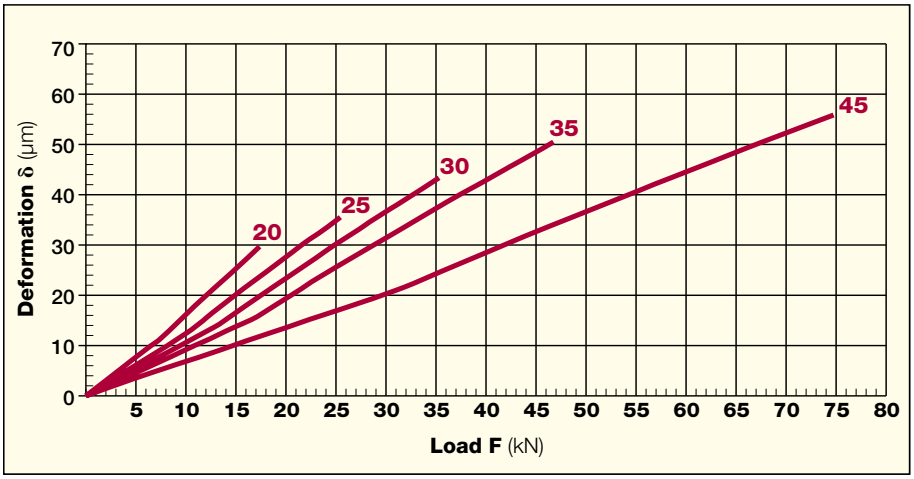

Tensile load

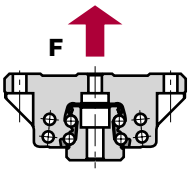

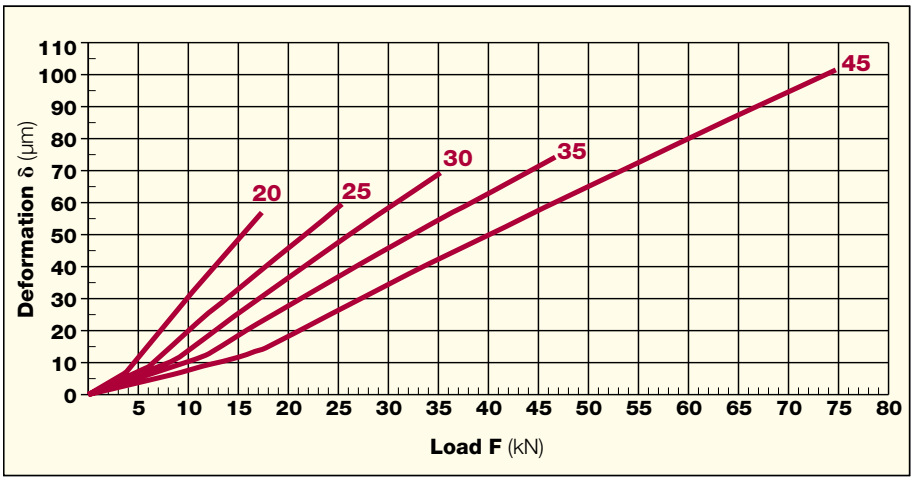

Lateral load

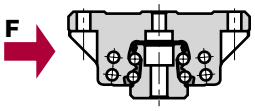

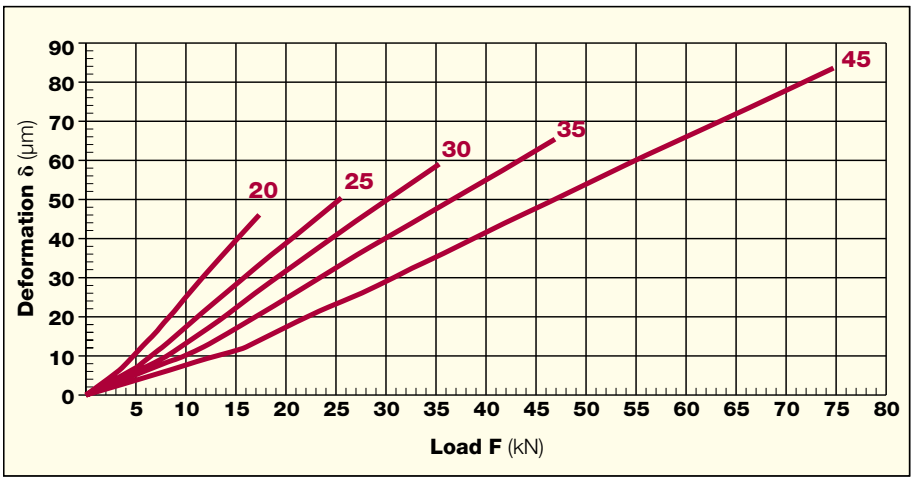

7.5 **Accessories** – to be ordered separately

Rail cover strip BAB

With the rail cover strip (stainless steel), a smooth sealing surface is achieved, which optimizes wiper function. The cover strip is easily installed and can be supplied in several pieces. The cover is secured by a full-surface adhesive tape which prevents liquids from seeping under the strip and potentially causing corrosion. In addition, the adhesive prevents the strip from separating from the rail in any installation orientation. The rail cover strip is always 5 mm shorter than the total length of the rail.

Plastic plug BRK

Plastic plugs can be utilized instead of the rail cover strip for closing off the rail attachment holes.
When utilizing them it must be noted, that the rails in their standard version have a chamfer of 0.5 × 45°, so that with the plastic plugs ring-shaped gaps result.
For applications in environments with strong contamination with dirt therefore the rail cover strip BAB has to be preferred. When plastic plugs are utilized, they have to be used in conjunction with additional wipers ZBN-U/ZBV-U.

Additional wipers ZBN/ZBV

The ZBN and ZBV wipers provide effective additional protection of the rails in highly contaminated surroundings. Two versions are available:

- ZBN made of NBR (Nitrile)
- ZBV made of VITON® (Fluoro-elastomer) for applications with aggressive coolants

The wipers ZBN/ZBV can also be used in combination with the metal wiper ABM.

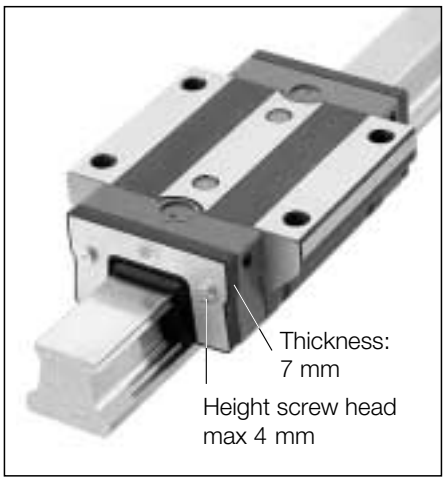

Additional wipers ZBN-U/ZBV-U

For rails without cover strip, such as rails attached from the bottom or with plastic plugs, exists a special type with adapted sealing lips geometry and black-anodized support. Two versions are available:

- ZBN-U made of NBR (Nitrile)
- ZBV-U made of VITON® (Fluoro-elastomer) for applications with aggressive coolants

The wipers ZBN-U/ZBV-U can also be used in combination with the metal wiper ABM.

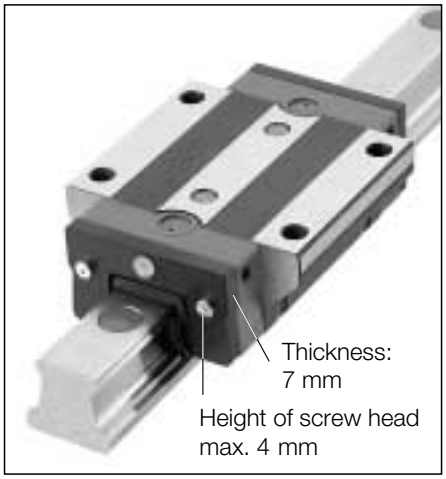

Metal wiper ABM

The metal wipers ABM serve for the protection of the sealing lips of carriages and additional wipers against hot metal chips. Large and loose dirt particles are pushed away and because of the large radial gap to the rail cannot get jammed. The metal wipers are ideally utilized in combination with additional wipers ZBN/ZBV.

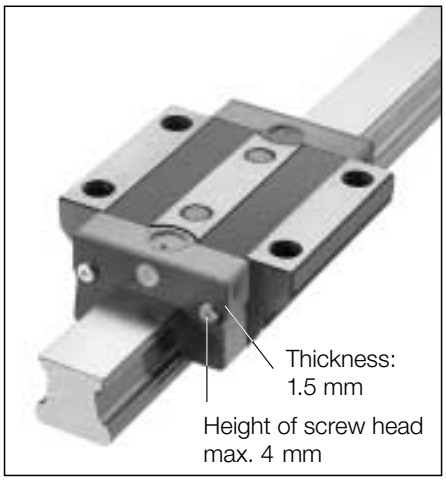

Bellows FBB

A standard bellows is available for MONORAIL sizes BM 20–BM 45. The bellows covers the entire length of the rail and is mainly used to provide additional protection against dust and splashed water.
The bellows is made of a synthetic fabric coated on both sides with polyurethane. Installation is simple and requires little time. The ZPB adapter plate is required to attach the bellows to the carriage. The adapter plate is screwed to the front plate of the carriage. The EPL end plate can be screwed to the end face of the rail. The bellows is fastened with two rivets each to the adapter plate and front plate.
The required adapter and end plates, the attaching screws and rivets are supplied with the order of a complete bellow.

Outside dimensions
The outside dimensions of the bellows and adapter plates conform to those of the respective front plates.

Adapter plate ZPB
The adapter plate is used for attaching the bellows to the carriage and is made of black-anodized aluminum.

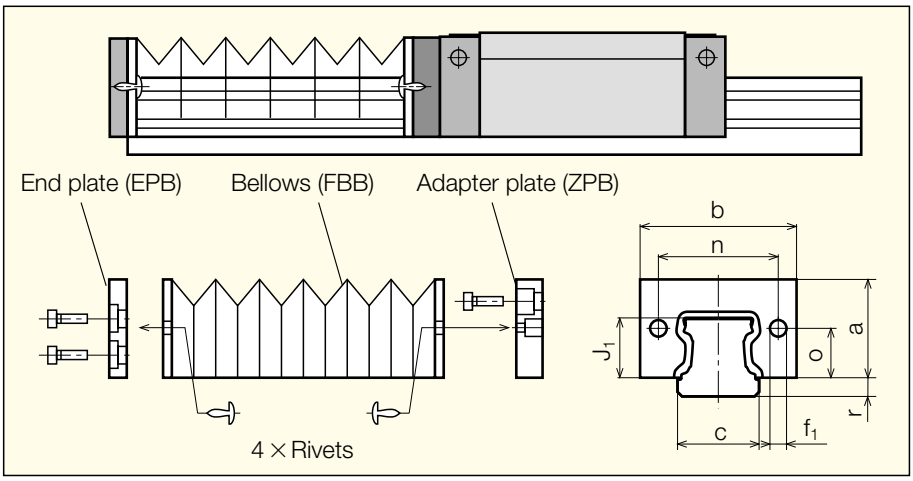

Size Dimension in mm	**FBB 20**	**FBB 25**	**FBB 30**	**FBB 35**	**FBB 45**
a	25	30	35	39.5	50
b	43	47	58.5	68	84
c	20	23	28	34	45
n	32	34	42	53	67
o	12.5	14	17.5	20	25.5
J_1	14.8	17.5	20.2	22.3	28.1
r	4.5	5.5	6.1	7.0	9.2
f_1	4.5	4.5	4.5	4.5	4.5

End plate EPB
The end plate is used to attach the bellows at the end of the rail and is made of red-anodized aluminum.
The attaching holes can be drilled into the rail according to the drawing below, if the bellows is to be retrofitted.

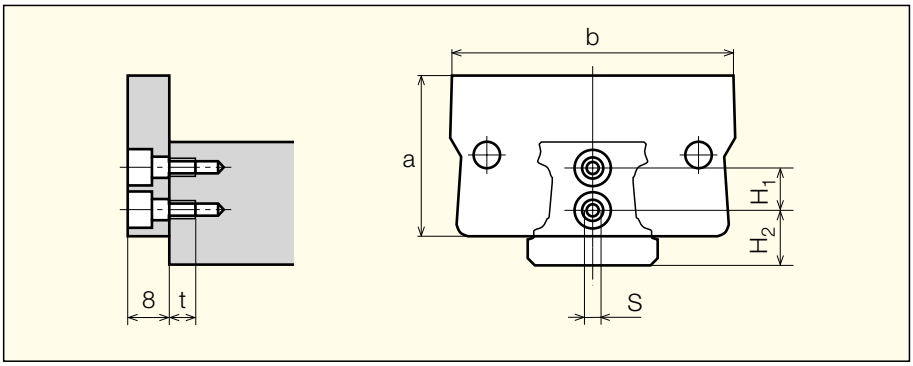

Size Dimension in mm	**EPB 20**	**EPB 25**	**EPB 30**	**EPB 35**	**EPB 45**
a	25	30	35	40	50
b	43	47	58.5	68	84
H_1	6.5	8	8	10.5	13.5
H_2	8.5	10	12	13	16.7
S × t	M 3 × 12	M 4 × 8	M 4 × 8	M 4 × 8	M 6 × 10

Bellows length calculation $\mathbf{L_b = L + 2 \cdot P}$

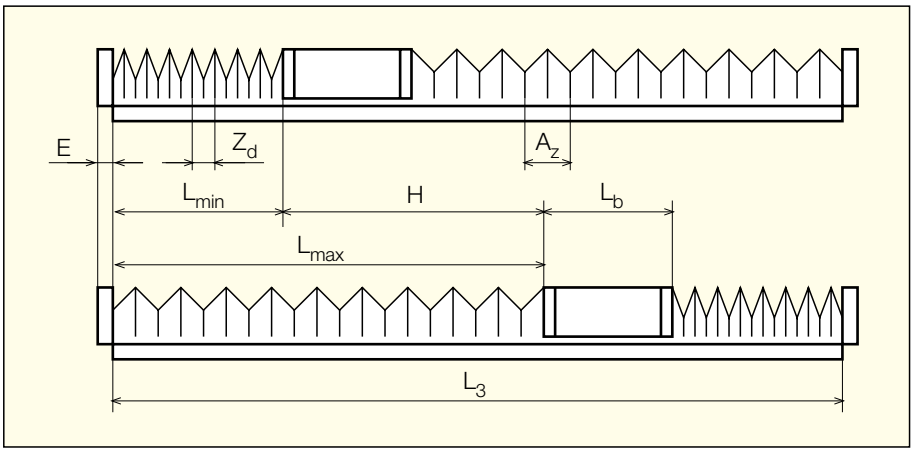

$\mathbf{L_b = 2 \cdot (L + 2 \cdot P) + L_w}$

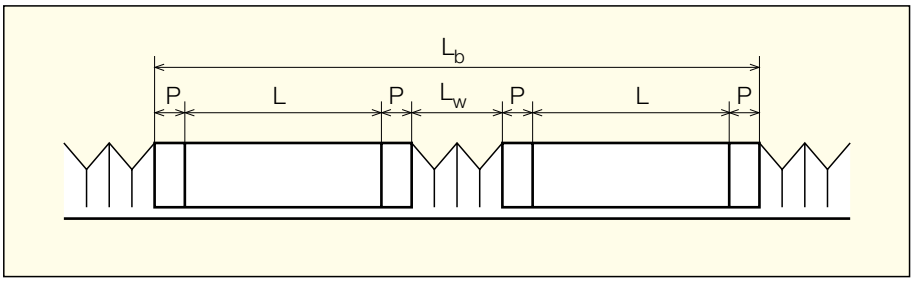

$L_{min} = n \cdot Z_d + 10$ $\qquad$ $L_{max} = H + L_{min}$

$$n = \frac{H}{A_z - Z_d}$$ round up to whole number

A_z : Extension per fold
E : End plate thickness
H : Travel distance
L : Carriage length (chapter 7.2 or 7.3)
L_b : Total length with adapter plates
L_3 : Rail length
L_{max} : Extended length of bellows
L_{min} : Closed length of bellows
L_w : Clearance between two carriages
n : Number of folds per bellows
P : Adapter plate thickness
Z_d : Closed distance per fold

Size Dimension in mm	**FBB 20**	**FBB 25**	**FBB 30**	**FBB 35**	**FBB 45**
A_Z	12	12	15	20	22
Z_d	2.0	2.7	2.7	2.7	2.7
E	8	8	8	8	8
P	10	10	10	10	10

Rail length calculation

$L_3 = L_{min} + L_{max} + L_b$

NEW
Assembly rail MBM

The plastic assembly rail is recommended for protection of the balls against contamination during transportation and storage. It also facilitates removing the carriage from the rail and the reinstallation of the carriage after the guideway assembly.
If necessary, the two internal screws for fastening the carriage can be tightened through the two holes in the assembly rail.

Front plate STB – spare part

The red front plates at the end sides of the MONORAIL carriages have two essential functions:
- Supply of lubricant and
- sealing the MONORAIL carriages.

Through several integrated lubrication connections, with the help of a lubricating nipple or by connection to a lubricating line lubricant can be supplied to the carriages, refer to chapter 3.6 Lubrication. Lubricating channels inside the front plate distribute the lubricant and guide it to the balls.
The integrated double-lip cross wipers seal the carriage at the ends and with this prevent the ingress of dirt and the loss of lubricant. Because the cross wipers are subject to wear, the front plates have to be examined regularly and if necessary replaced, also refer to chapter 10, Precautionary Measures.

NEW
Brakes and clamps

SCHNEEBERGER for the most diverse application cases offers clamping – and braking elements for the ball guideway MONORAIL BM. The various alternatives can be utilized for applications like the securing of a position of linear axes, the clamping of machine tables and right to the application of a controllable counter-force in case of chip-removing processes.
Available are manual, pneumatic- and hydraulic-actuated products.
Versions opening when pressure is applied are optimally suitable for securing vertical axes or linear motor axes in case of an electric power failure.
For more detailed information, please contact your SCHNEEBERGER representative.

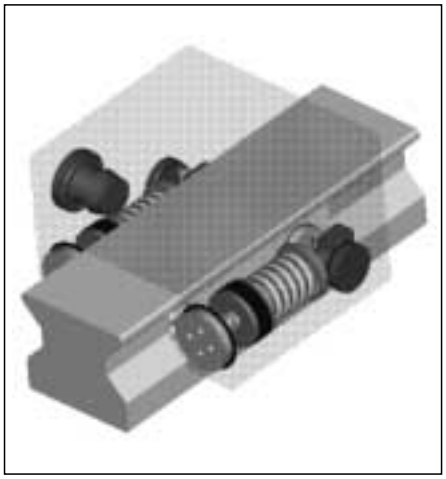

7.6 Ordering information BM

When custom MONORAIL BM versions are required, additional information is needed to ensure the correct execution of the order. This has to be marked on the supplementary order sheet.

- Type, accuracy class, preload in the event of different carriage types on a rail
- Additional wipers
- Locating sides of carriages and rail
- Position of the lubrication connections
- Installation orientation and type of lubrication

In the case of more than 2 rails, butt joint rails or in the case of more than two carriages per rail, a separate drawing is required on which as well the lengths of all sections of multi-section rails and rail cover strips are indicated.

Guideway BALL-MONORAIL BM

__	BM	35	–C2	–0964	–U	–19	–25	–X	–G3	–V1	–GP	–SO	–A	–HH

Quantity		
Guideway type **BM**		
Size	**15, 20, 25, 30, 35, 45**	
Carriage type Carriage qty	**A, B, C, D** **1, 2, ...**	When different carriages per rail e.g. –A2–B1
Rail length $\mathbf{L_3}$ (in mm).		State the total length for multi-section rails ground together.
Rail version*	**U**	Rails with tapped attachment holes
Starting hole pitch $\mathbf{L_5}$ (in mm)		
End hole pitch $\mathbf{L_{10}}$ (in mm)		
Rail hole pitch $\mathbf{L_4}$ special*	**X** **Y**	half hole pitch (as MR) L_4 not standard or not uniform (drawing required)
Accuracy class	**G0, G1, G2, G3**	
Preload class	**V1, V2, V3**	
Matched*	**GP**	
Lubrication connection not standard* Position has to be indicated on supplementary sheet	**SO** **SS** **ST**	above lateral special, 2 × connections per carriage (not sizes 15, 20)
Carriages with parallel locating sides*	**A**	carriage width B_A = (B+0.2) ± 0.05 mm
Hard-chroming*	**H** **HH**	only rails hard-chromed rails and carriages hard-chromed

*Optional specifications

Accessories BALL-MONORAIL BM – to be ordered separately

Rail cover strip

__	BAB	35	–0958	

Quantity		
Type	**BAB**	(Steel cover strip)
Size	**15, 20, 25, 30, 35, 45**	
Rail length $\mathbf{L_3}$	(Length rail cover strip = L_3 – 5 mm)	

Plugs

__	BRK	35

Quantity		
Type	**BRK**	(plastic)
Size	**15, 20, 25, 30, 35, 45**	

Additional wipers

__	ZBN	35	–U

Quantity		
Type	**ZBN** **ZBV**	(NBR) (Viton)
Size	**15, 20, 25, 30, 35, 45**	
Version	without specification **U**	Rail with cover strip BAB U-rails and rails with plugs BRK

Metal wipers

__	ABM	35

Quantity		
Type	**ABM**	
Size	**15, 20, 25, 30, 35, 45**	

Bellows

__	FBB	30	–24	–EZ

Quantity		
Type	**FBB**	
Size	**20, 25, 30, 35, 45**	
Number of folds		
Version	without specification **EZ** **ZZ**	bellows only, without attachment plates with 1 endplate (EPL) and 1 adapter plate (ZPL) – For mounting to rail ends with 2 adapter plates – For mounting between two carriages

Attachment plates for bellows

__	ZPB	–30

Quantity		
Type	**ZPB** **EPB**	Adapter plate End plate
Size	**20, 25, 30, 35, 45**	

Assembly rail

__	MBM	–20

Quantity		
Type	**MBM**	
Size	**15, 20, 25, 30, 35, 45**	

Front plate (spare part)

__	STB	–30	–AB	–SO

Quantity		
Type	**STB**	
Size	**15, 20, 25, 30, 35, 45**	
Version	**AB** **CD**	for carriage type BMA, BMB for carriage type BMC, BMD
Lubrication connection	no specification **SO** **SS** **ST**	Standard, center front from above lateral special, 2 × connections per carriage (not sizes 15, 20)

Supplementary sheet for BM 15–45/Arrangement of carriages and accessories

Customer, Address	
Machine, axis	Drawing No. Customer
SCHNEEBERGER-rep.	Drawing No. SCHNEEBERGER
Ordering information MONORAIL 1	
Ordering information MONORAIL 2	

MONORAIL 1

Type, Size | Type, Size

Wiper ABM
ZBN/ZBN-U
ZBV/ZBV-U
Lubrication SS

FBB | FBB | FBB

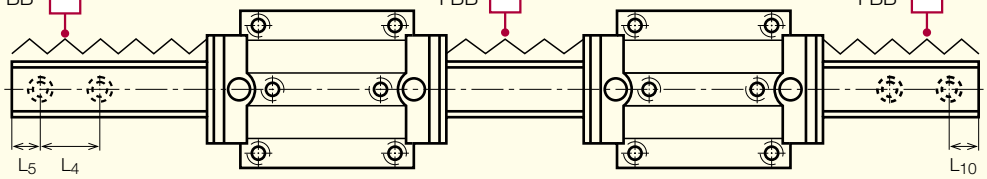

Lubrication
laterally SS
above SO
front center SM

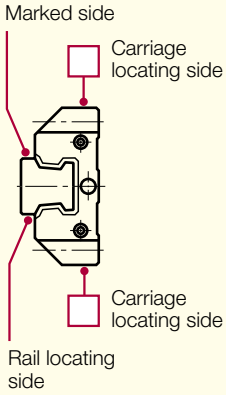

MONORAIL 2

Type, Size | Type, Size

ABM
ZBN/ZBN-U
ZBV/ZBV-U
SS

FBB | FBB | FBB

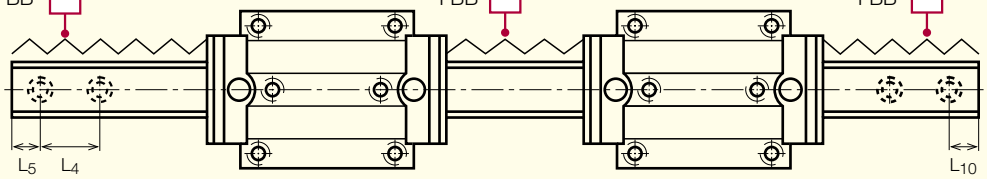

SS
SO
SM

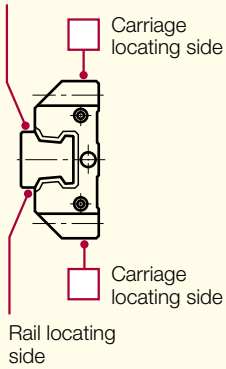

Mounting position

- standard (horizontal/vertical)
- special: turned ____° on longitudinal axis of the rail (in combination with oil, see special lubrication instructions)

Lubrication Accessories

- Lubricating nipples mounted

Attach

- from above
- from bottom (-U-)

Rail covering

- BRK
- BAB

8.1 Basics

The demands for accuracy, surface quality and short machining times are becoming increasingly stringent. This is why the anti-friction guideways in modern machine construction are selected according to permissible elastic deformation.
The following steps are therefore necessary for the dimensioning of anti-friction guideways.

- **Determination of the external forces and moment loads**
- **Distribution of forces and moment loads acting on individual MONORAIL carriages**
- **Preload and deformation determination**
- **Calculation of operational life**
- **Calculation of static reliability**

The operational life is limited by material fatigue as well as by heavy wear of the rolling-contact surfaces.
The rolling contact of the surfaces causes material fatigue and therefore results in damage to the track and rolling element (spalling). If the force acting on the rolling-contact surfaces is known, the operational life can be calculated according to DIN ISO 281 or DIN 636.
Relative motions of the loaded surfaces cause friction wear. The extent of wear is mainly determined by the magnitude of the relative motion, surface pressure, lubrication and degree of contamination.

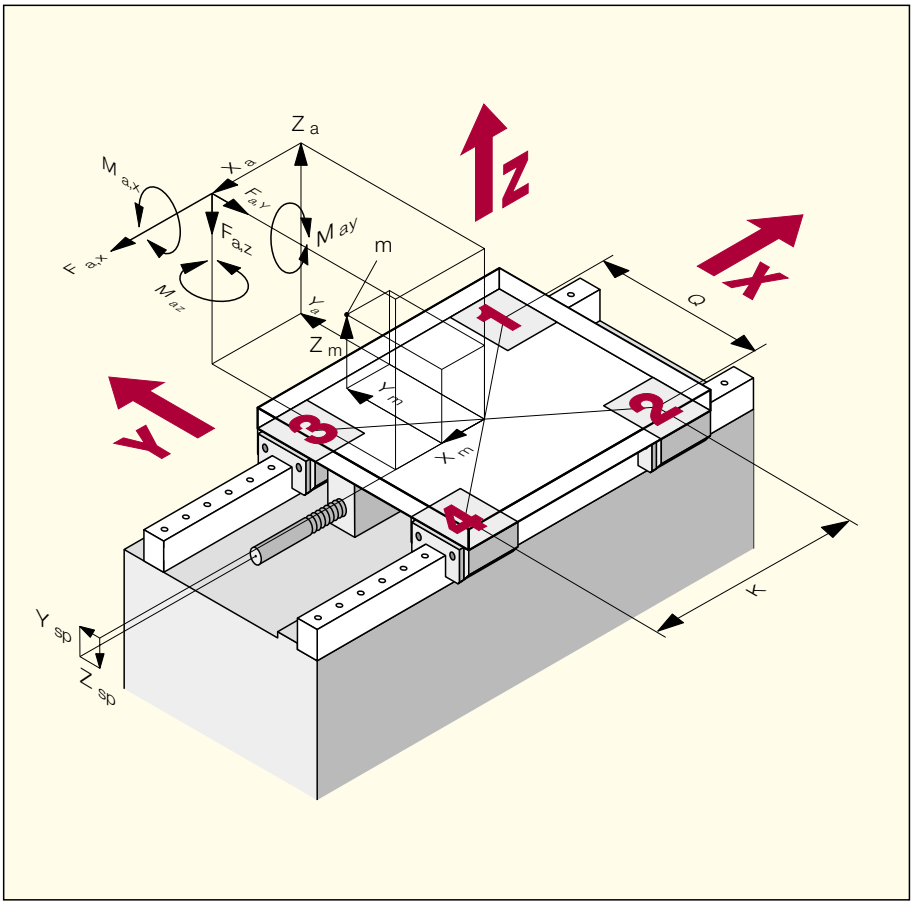

The operational life is calculated in the following example. Due to undeterminable factors, there is no standard wear-life calculation procedure.

8.2 Operational life calculation

Determination of external forces and moments
The external forces acting on the guideway system are determined by the force components $\mathbf{F_{ax}}$, $\mathbf{F_{ay}}$, $\mathbf{F_{az}}$ with the force application coordinates $\mathbf{X_a}$, $\mathbf{Y_a}$, $\mathbf{Z_a}$. A mass **m** with the acceleration components $\mathbf{a_x}$, $\mathbf{a_y}$, $\mathbf{a_z}$ causes the guideway system to be loaded by the inertia forces $\mathbf{F_{mx}}$, $\mathbf{F_{my}}$, $\mathbf{F_{mz}}$, which act at the center of gravity coordinates $\mathbf{X_m}$, $\mathbf{Y_m}$, $\mathbf{Z_m}$.

$$\mathbf{F_{mx} = m \cdot -a_x}$$
$$\mathbf{F_{my} = m \cdot -a_y}$$
$$\mathbf{F_{mz} = m \cdot -a_z}$$

The forces $\mathbf{\Sigma F_y}$, $\mathbf{\Sigma F_z}$ acting at 90° to the longitudinal axis of the table are to be taken up directly by the guideway sytem:
The longitudinal forces $\mathbf{\Sigma F_x}$ are transmitted by the longitudinal drive:
External moments $\mathbf{M_{ax}}$, $\mathbf{M_{ay}}$ **and** $\mathbf{M_{az}}$ can also act:
The external forces $\mathbf{F_{ax}}$, $\mathbf{F_{ay}}$, $\mathbf{F_{az}}$ and inertia forces $\mathbf{F_{mx}}$, $\mathbf{F_{my}}$, $\mathbf{F_{mz}}$ in combination with their respective points of actions X_a, Y_a, Z_a or X_m, Y_m, Z_m, also result in moments:
The point of action of the force of the longitudinal drive $\mathbf{Y_{sp}}$, $\mathbf{Z_{sp}}$ affects the moments acting on the guideway system.

Distribution of forces and moment loads on the individual MONORAIL carriages
The longitudinal carriage spacing **K** and lateral spacing **Q** are required to calculate the side forces $\mathbf{F_{jy}}$ and compression-tension forces $\mathbf{F_{jz}}$ on each MONORAIL carriages (j = 1…n).
The arrangement of carriage and guiderail in the axes must be taken into account.

Determination of preload and deformation
The MONORAIL preload is determined by the service conditions as well as the demands made on the rigidity of the machine guideway.
Preloads V1, V2 or V3 increase not only the rigidity, they also additionally load the rolling-contact surfaces as long as the preload is effective.
The forces acting on the MONORAIL cause displacements which can be obtained from the deformation diagrams in chapter 4.4 for MONORAIL MR, resp. 7.4 for MONORAIL BM.

Operational life calculation
The factors affecting the operational life are the forces acting on MONORAIL carriages, selected preload, dynamic loading capacity C and event probability.
If constant forces act over the entire translation distance, the operational life is calculated with the equivalent force $\mathbf{P_j}$. However, if varying forces are expected, the dynamic equivalent loading must be used.

Equivalent force P
The equivalent force $\mathbf{P_j}$ for each MONORAIL (j = 1…n) is required for the operational life calculation. The values of the force components $\mathbf{F_{jy}}$ and $\mathbf{F_{jz}}$ acting on each MONORAIL carriage are added algebraically to obtain the effective $\mathbf{F_j}$:

$$\mathbf{F_j = |F_{jy}| + |F_{jz}|}$$

The following formula can be used to calculate the approximate value of the equivalent force $\mathbf{P_j}$ which actually acts on the rolling-contact surfaces:

$$\mathbf{P_j = F_{preload} + 2/3 \cdot F_j} \qquad \text{for } \mathbf{F_j \leqslant 3 \cdot F_{preload}}$$

$$\mathbf{P_j = F_j} \qquad \text{for } \mathbf{F_j > 3 \cdot F_{preload}}$$

Dynamic equivalent loading
If force P is not constant, the equivalent force **P** in the step-loading mode can be calculated for each MONORAIL with the following formula (the respective force $\mathbf{P_{jk}}$ is constant for each partial translation distance $\mathbf{l_k}$):

$$P_j = \sqrt[10/3]{\frac{\sum_{k=1}^{n} (P_{j,k}{}^{10/3} \cdot l_k)}{\sum_{k=1}^{n} l_k}}$$

Dynamic loading capacity C
The loading capacity figures for anti-friction guideways are based on the principles specified by the ISO for calculation of rolling-contact bearings (DIN ISO 281).
Dynamic loading capacity is the loading which results in a nominal operational life corresponding to a translation distance of 100 000 m provided that the loading due to mass and direction is unchanged and the line of influence acts vertically on the rolling-contact bearing unit.

Comparison of loading capacities
Other suppliers often indicate their loading capacities for a translation distance of 50 000 m. These values according to JIS Standard are above the values according to DIN ISO. The recalculation of the loading capacities is done as follows:

$\mathbf{C_{50} = 1.23 \cdot C_{100}}$ for roller guideways

$\mathbf{C_{50} = 1.26 \cdot C_{100}}$ for ball guideways

Event probability
According to DIN ISO, the loading capacities for rolling-contact bearings are specified such that a value results from the operational life formula which will be exceeded with a probability of 90%. If this probability is insufficient, the operational life values must be reduced by a factor a_1 according to the adjacent table:

Event probability %	**90**	**95**	**96**	**97**	**98**	**99**
Factor a_1	1.00	0.62	0.53	0.44	0.33	0.21

Operational life calculation
The nominal calculated operational life L for the equivalent force P and a dynamic loading capacity C is

$$L = a_1 (C/P)^q \cdot 10^5 \text{ m}$$

L = nominal life (m)
a_1 = event probability
q = 10/3 for roller guideways
q = 3 for ball guideways

$$L_h = \frac{L}{2 \cdot s \cdot n \cdot 60} = \frac{L}{60 \cdot v_m}$$

L_h = nominal life (h)
s = stroke length (m)
n = stroke frequency (min^{-1})
v_m = medium traversing speed (m/min)

8.3 Calculation of static reliability factor

The static reliability factor S_0 is the reliability with respect to permanent deformations on rolling elements and tracks and is defined as the ratio of the static loading capacity C_0 to the static equivalent loading P_0.

$S_0 = C_0/P_0$

The actual force acting on the rolling-contact surfaces must be taken into account for P_0. The governing factor for a deformation of the rolling-contact surfaces is the highest amplitude which can also occur for a very short period of time.

Operating conditions	**S_0**
Highest rigidity, high shock loads and vibrations	⩾ 6
High rigidity, medium, varying loads and vibrations	⩾ 4
Uniform load, small vibrations	⩾ 3

8.4 Calculation Program for the dimensioning of MONORAILs

The manual calculation of the service lifetime, of the load bearing safety and of the displacement under a combined load is very complicated and can only be carried out for simple applications. For this reason, SCHNEEBERGER as a service offers to carry out these calculations with the help of a computer program.

Objective and Purpose of the Calculation Program
The computer-assisted calculation program for the design of MONORAILs serves for the determination of:

- the required MONORAIL size
- the optimum preload
- the static reliability factor
- the nominal service lifetime
- the elastic displacements of the working point under the effect of a load for a given MONORAIL system.

Taken into consideration to do this are the real, non-linear rigidities of the individual MONORAIL carriages and the interaction of the carriages amongst one another, which are produced by the differing rigidities under tensile, compressive and lateral loads.
Additional deformations as a result of thermal expansion and elastic deformation of the machine construction are not taken into consideration.

Required Data
For the calculation, all information is required, as represented on the following machine drawing with data sheet:

- Guideway geometries with the number of carriages and rails, carriage spacings longitudinally and laterally
- Position of the axes in space and distances between them (distances between the reference points of neighboring axes)
- Masses of all machine axes and workpieces to be calculated
- Location of the mass centers of gravity
- Location of the drive elements versus the corresponding of the axis reference point
- Location of the load point (point of attack of force and moment)
- Maximum travel distances (stroke) of the axes to be calculated
- Maximum speed and acceleration of the axes

Additionally, in the case of differing load cases:

- Collective load with speed, acceleration, travel distance and percentage proportion of time as well as magnitude and direction of the forces and moments applied at the point of work in function of the corresponding load case.

All geometrical dimensions are referred to the corresponding axis center (refer to drawing). The designation of the axes in the cartesian coordinates' system can be selected as required.

For a large number of typical machines and designs, SCHNEEBERGER can provide machine sketches and data sheets. For further information, please contact a SCHNEEBERGER representative.

Sample data sheet for an x-/y-table

Masses

m_x = _____ kg m_y = _____ kg m_w = _____ kg

Dimensions

S_1 = _____ mm S_2 = _____ mm S_3 = _____ mm
S_4 = _____ mm S_5 = _____ mm S_6 = _____ mm
S_7 = _____ mm S_8 = _____ mm S_9 = _____ mm

K_1 = _____ mm K_5 = _____ mm
Q_2 = _____ mm Q_4 = _____ mm

A_2 = _____ mm A_3 = _____ mm
A_4 = _____ mm A_6 = _____ mm

L_4 = _____ mm L_5 = _____ mm L_6 = _____ mm

B_1 = _____ mm B_2 = _____ mm B_3 = _____ mm

Stroke (max.)

s_x = _____ mm s_y = _____ mm

Acceleration (max.)

a_x = _____ m/s^2 a_y = _____ m/s^2

Collective load: Forces / Moments

No.	**Cycle**	**F_x** N	**F_y** N	**F_z** N	**M_x** Nm	**M_y** Nm	**M_z** Nm
1							
2							
3							
4							
5							

Collective load: Travel distance / Proportion of time

No.	**x-axis speed** v (m/min)	**Proportion of time** t (%)	**Travel distance** s (mm)	**y-axis speed** v (m/min)	**Proportion of time** t (%)	**Travel distance** s (mm)
1						
2						
3						
4						
5						

Sample machine drawing for an x-/y-table

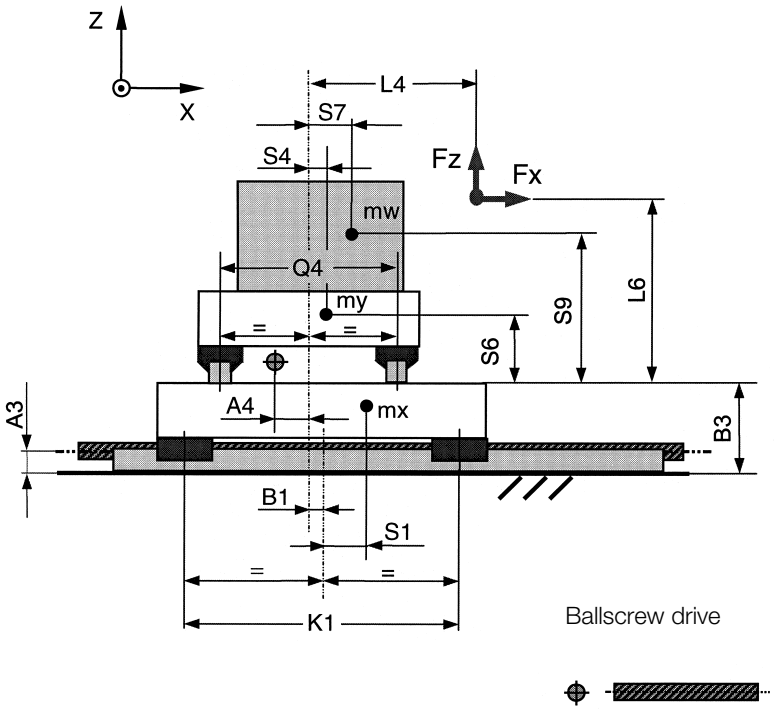

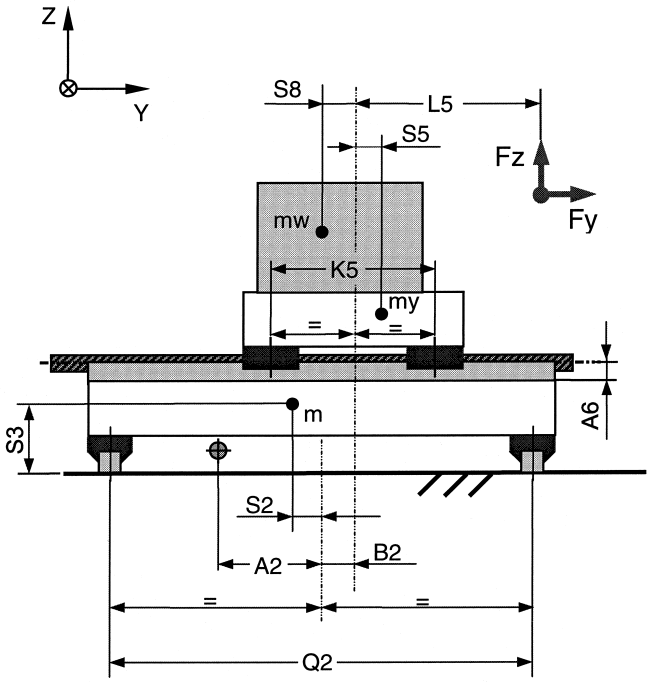

8.5 MONORAIL AutoCAD® library

The MONORAIL and AutoCAD library was created by SCHNEEBERGER to provide support for design and developments departments. This library can be used with the following resources:

Library version 13:
- AutoCAD release 13c2 or higher
- Operating system MS-DOS 3.5 or higher, Windows 3.1, Windows 95 and Windows NT

Library version 14:
- AutoCAD release 14c1 or higher
- Operating system Windows 95 and Windows NT

Information: The major specifications of the selected size is displayed.
Type of insert: Carriage or rail.
Positioning: You can shift the carriages or rails longitudinally as required.
Drawing: The MONORAILs are drawn in the selected layer when you quit the program. When you have made your choice, the program automatically returns to AutoCAD and you can carry on drawing.
Further use: You can call all AutoCAD commands to edit the MONORAILs that you have drawn.
The library can be supplied by all SCHNEEBERGER companies or representatives or can be downloaded from our website at www.schneeberger.com at menu «SERVICES».

MONORAIL BM
The AutoCAD library for MONORAIL BM is in preparation. Please contact your SCHNEEBERGER representative.

9.1 Installation methods

MONORAILs can be installed horizontally or vertically. To achieve maximum carriage rigidity, use of all six mounting bolts is necessary.

The MRA/MRB and BMA/BMB carriage types can be fastened to the structure in two ways. They therefore are fitted with so called combination holes.

a) Using the tapped holes
This is the preferred method. It results in a stronger joint because the thread permits the use of a larger diameter screw.

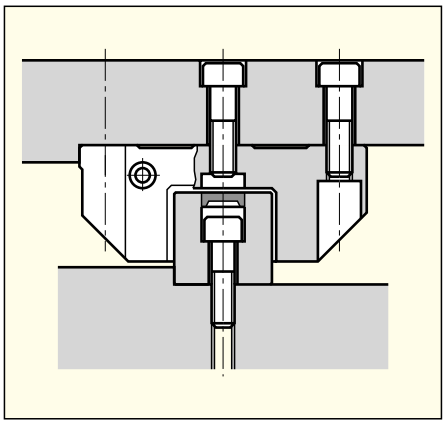

b) Using the through-holes
In this case screws with low screw heads DIN 6912 have to be used in the two middle attaching holes.
Remove the protective plugs if both middle attaching holes in the carriage are also needed.

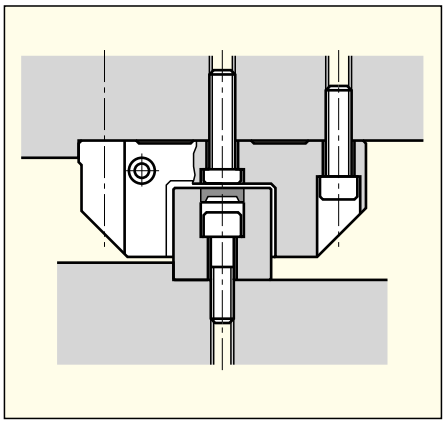

The MRC/MRD and BMC/BMD carriage types can be fastened only by using the tapped holes. Remove the protective plugs if the middle attaching holes in the carriage are needed.

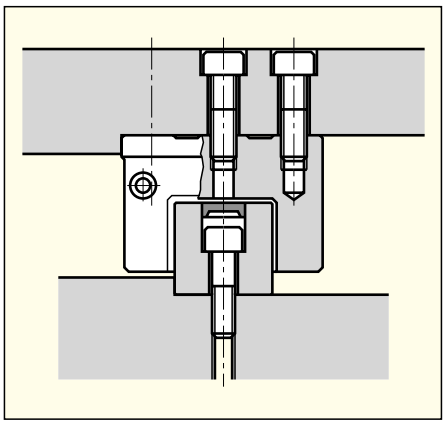

9.2 Configuration of the locating surfaces

Methods of lateral fixation

MONORAILs can be fastened with or without lateral locating surfaces.
If the MONORAIL is subjected to considerable side loads, we recommend the use of locating surfaces. Fastening can be effected with clamping screws (illustration on right), by laterally fixing the rail and carriage with a clamping strip (below left) or with a taper gib strip (below right).

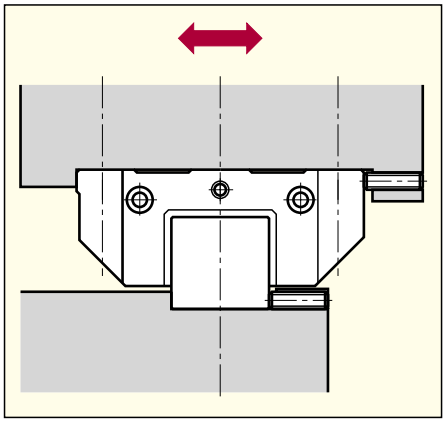

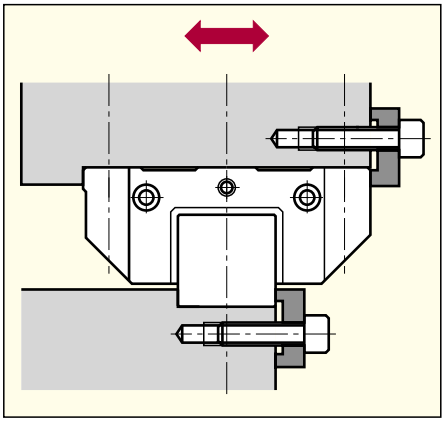

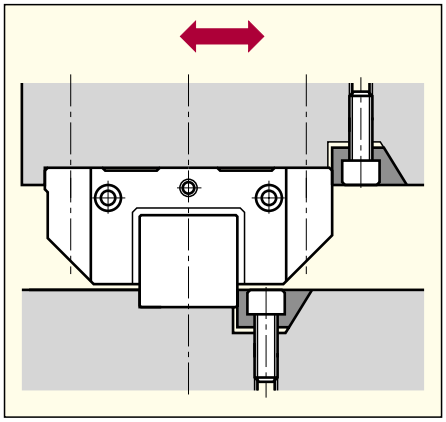

Configuration of the lateral locating sides

The corners between the support and locating surfaces of the surrounding structure are normally provided with a relief groove. However, if no relief groove is provided, then the dimensions tabulated below must be maintained.

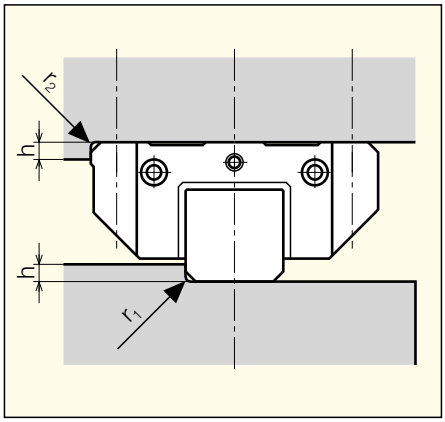

Type	Size	h	$r_{1\ max}$	$r_{2\ max}$
MR	25	5	0.8	0.8
	35	6	0.8	0.8
	45	8	0.8	0.8
	55	10	1.2	1.2
	65	10	1.5	1.5
BM	15	3.5	0.8	0.6
	20	4	0.9	0.9
	25	5	1.1	1.1
	30	5.5	1.3	1.3
	35	6	1.3	1.3
	45	8	1.3	1.3

9.3 Configuration of assembly surfaces

MONORAIL advantages can only be achieved when mounted to a rigid, accurately machined structure.
The surface quality of the supporting surfaces has no direct influence on the operational and run-out behavior. A roughness average ratio of R_a 0.4 to 1.6 µm is recommended for support and locating surfaces to enable the specified flatness tolerances to be maintained.

Inaccuracies of the attachment surfaces are partially compensated by the elastic deformation of the MONORAIL. However, they may affect overall accuracy, running behavior and operational life.

Geometrical and position accuracy of the support surfaces

Permissible height deviations
(use values in mm for the calculation)

A MONORAIL height
B Carriage width
B_1 Rail width
K Longitudinal carriage spacing
L Carriage length
Q Rail spacing
n_1 Flatness per carriage
n_2 Flatness per rail

E_1 Max. permissible lateral height deviation; also includes tolerance for dimension A
E_2 Max. permissible longitudinal height deviation; also includes tolerance Δ A
E_3 Max. permissible lateral parallelism tolerance of rail supporting surface
E_4 Max. permissible lateral parallelism of carriage supporting surface
E_5 Max. permissible longitudinal parallelism of carriage supporting surface
E_6 Flatness of each rail support surface over entire length as a function of accuracy class

	Preload class V1	**V2**	**V3**
$E_1 = E_{1.1} + E_{1.2}$	0.0003 Q	0.0002 Q	0.0001 Q
E_2 **MRA/MRC/BMA/BMC**		0.00005 K	
E_2 **MRB/MRD/BMB/BMD**		0.00004 K	
E_3	0.0003 B_1	0.0002 B_1	0.0001 B_1
E_4	0.0003 B	0.0002 B	0.0001 B
E_5		0.00004 L	
E_6	Values from diagram 3.3 Running accuracy Δ		

The flatness E_6 is given as well as the parallelism tolerance to prevent the total permissible tolerance from being accommodated by a single carriage when, for example, four carriages are running on one rail.

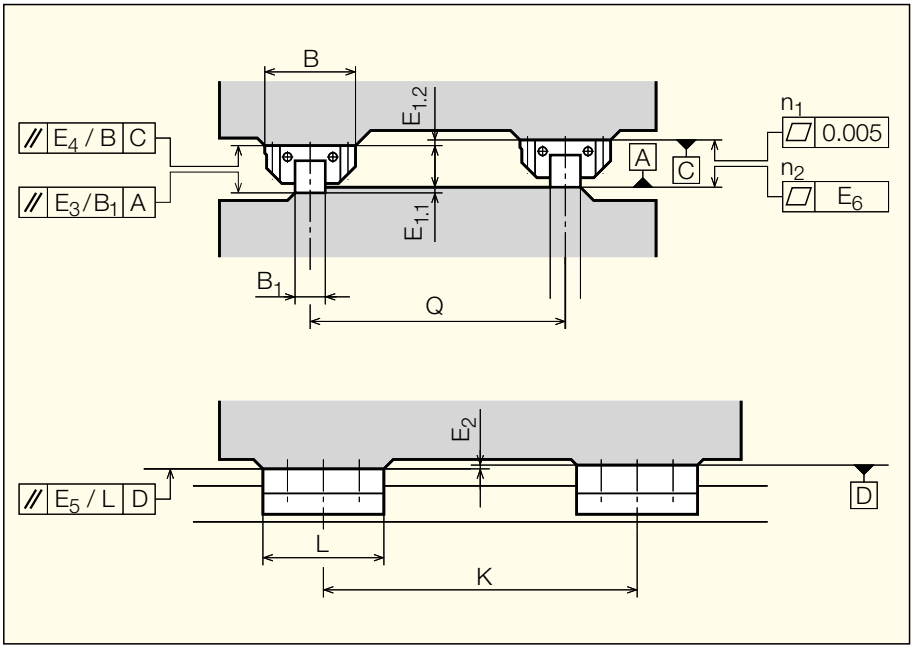

Parallelism tolerances of the locating surfaces

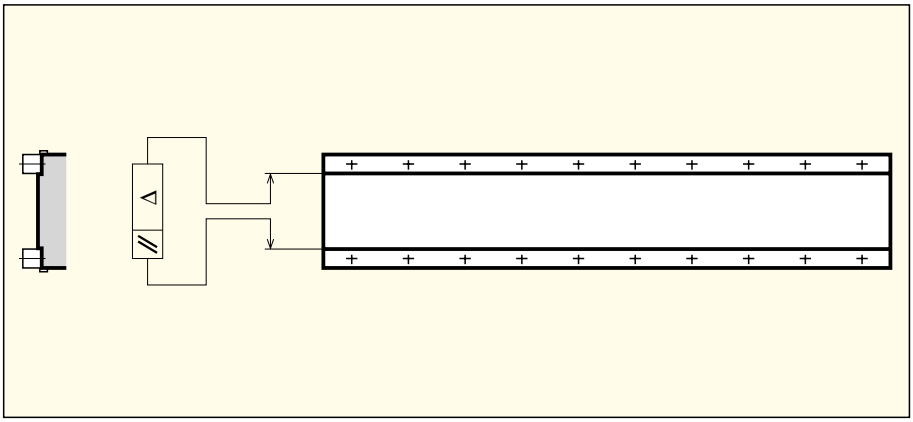

Tolerances for preload class (mm)	**15**	**20**	**25**	**30**	**35**	**45**	**55**	**65**
V1	0.010	0.012	0.016	0.016	0.021	0.024	0.026	0.028
V2	0.007	0.008	0.010	0.010	0.014	0.016	0.017	0.018
V3	0.003	0.004	0.005	0.005	0.008	0.009	0.010	0.011

The specified values are also valid when locating surfaces are provided for the carriages only.
Because of parts and mounting tolerances the preload can be increased. Together with the during the operation arising uneven deformations of the rail surroundings an increased stress of the rolling partners may occur.

Example

MONORAIL-System:	2 × MR 35-A2-1800-G1-V2
Longitudinal carriage spacing K:	K = 800 mm
Rail spacing Q:	Q = 450 mm
MONORAIL-height A from chart 4.2:	A = 48 mm
Carriage width B from chart 4.2:	B = 100 mm
Rail width B1 from chart 4.2 resp. 4.3:	B1 = 34 mm
Carriage length L from chart 4.2:	L = 109 mm

Values from chart 3.2 dimensional tolerances:

Max. tolerance MONORAIL-height A between two rails for accuracy class G1:	Tol. A = 0.020 mm (standard) Tol. A matched = 0.007 mm
Max. tolerance ΔA of two carriages on a rail:	ΔA = 0.005 mm

Values from above diagram:

perm. lateral height deviation E_1 = 0.0002*Q:	E_1 = 0.090 mm (incl. Tol. A)
perm. longitudinal height deviation E_2 = 0.00005*K:	E_2 = 0.040 mm (incl. Δ A)
perm. lateral parallelism rail supporting surface E_3 = 0.0002*B1:	E_3 = 0.007 mm
perm. lateral parallelism of carriage supporting surface E_4 = 0.0002*B:	E_4 = 0.020 mm
perm. longitudinal parallelism of carriage supporting surface E_5 = 0.00004*L:	E_5 = 0.004 mm

Flatness of each rail support surface E_6 from chart 3.3 with L_3 = 1800 mm and accuracy class G1:	E_6 = 0.007 mm /1800 mm
Flatness per carriage n_1 from picture page 97:	n_1 = 0.005 mm
Flatness per rail n_2:	n_2 = E_6 = 0.007 mm /1800 mm

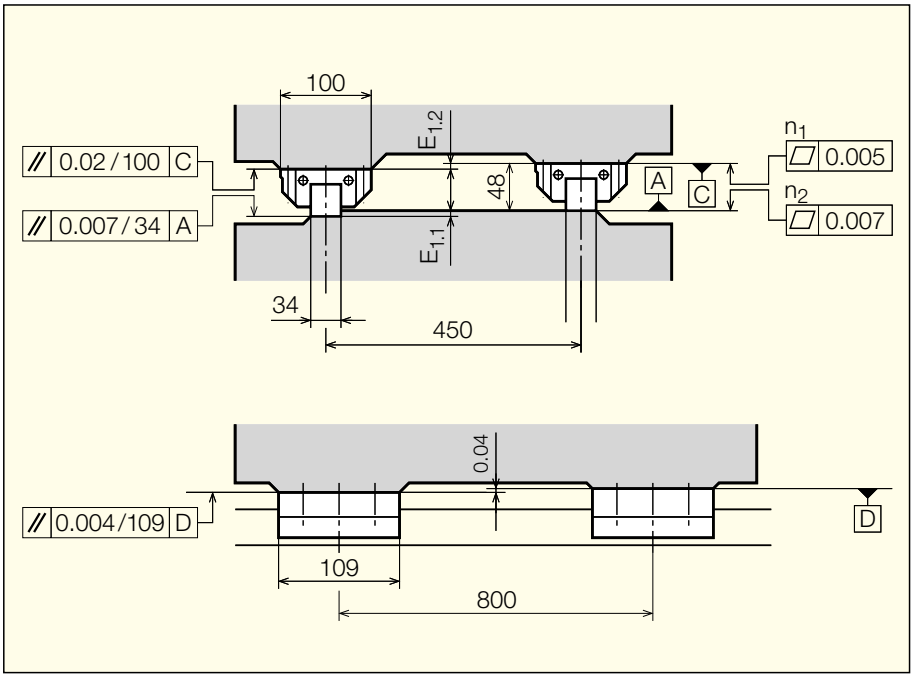

Parallelism tolerances of the locating surfaces from chart page 98: Δ = 0.014 mm

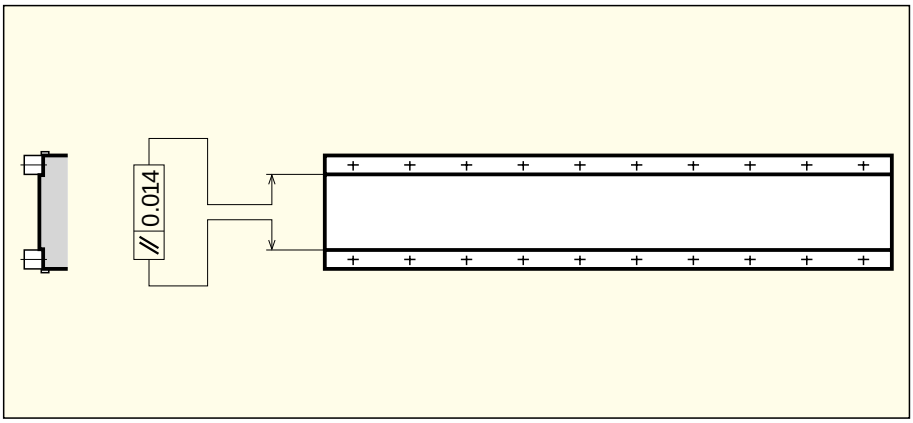

9.4 Attaching the rails

MONORAIL MR, MZ and BM
See the table for the max. tightening torques for attaching screws DIN 912. Values are based on a coefficient of friction of μ = 0.125.

Attention:
- The recommendations of the screw suppliers have to be followed.
- Screws with low head DIN 6912 are installed according to strength grade 8.8
- For rails with measuring system **AMS,** screws of strength grade 8.8 have to be used.

Tightening torques for DIN 912 attaching screws, μ = 0.125

Strength grade	**Max. tightening torque** (Nm) M4	M5	M6	M8	M10	M12	M14	M16
8.8	3	6	10	24	48	83	132	200
12.9	5	10	16	40	81	95	166	265

A more uniform preload force is obtained when grease containing MoS_2 (Molybdenum disulfide) is applied to the rail attaching screws which are then tightened with a torque wrench. This results in a marked improvement of running accuracy.

Attention:
By using greases, especially greases containing MoS_2, the coefficient of friction μ can drop to half. The torques must be reduced accordingly. It may be necessary to execute field tests to evaluate the exact coefficient of friction.

Secure the screws in case of expected decreasing of the internal tension.

9.5 Permissible side force with no locating surfaces

The guide values for the maximum permissible side forces can be obtained from the table below for cases where **no locating surfaces** are provided. The F_{max} values depend on dynamic load carrying capacity C, the method of fastening the MONORAIL and the strength grade of screws.

Max. side force F_{max} (N) per carriage without locating surfaces
Depending on size and number of attaching screws DIN 912

Strength grade	**F_{max} (N)** **M 4** 4 scr.	6 scr.	**M 5** 4 scr.	6 scr.	**M 6** 4 scr.	6 scr.	**M 8** 4 scr.	6 scr.
8.8	1 250	1 900	2 100	3 150	2 950	4 450	5 400	8 100
12.9	2 150	3 250	3 550	5 300	5 000	7 500	9 200	13 800

Strength grade	**F_{max} (N)** **M 10** 4 scr.	6 scr.	**M 12** 4 scr.	6 scr.	**M 14** 4 scr.	6 scr.	**M 16** 4 scr.	6 scr.
8.8	8 600	13 000	12 600	19 000	17 300	26 000	23 900	35 800
12.9	14 600	21 900	21 300	32 000	29 300	44 000	40 300	60 400

Max. side force F_{max} (N) on the rail without locating surfaces
Depending on the size of the attaching screws DIN 912. The values in the chart indicate the max. allowed side force of one carriage on the rail and are valid for a standard hole pitch L_4. The values increase accordingly by the use of two or more carriages.

MR Strength grade	**F_{max} (N)** **M 6**	**M 8**	**M 12**	**M 14**	**M 16**
8.8	3 400	6 200	13 900	20 000	29 800
12.9	5 700	10 600	23 500	33 700	50 400

BM Strength grade	**F_{max} (N)** **M 4**	**M 5**	**M 6**	**M 8**	**M 12**
8.8	450	1 100	1 750	2 850	7 200
12.9	800	1 850	3 000	4 800	12 200

9.6 Installation guidelines MONORAIL

Installation instructions

The installation of the MONORAIL guideways, distance measuring system and accessories is described in detail in the

- **Installation Instructions MONORAIL** (Content: MR, BM) and
- **Installation Instructions MONORAIL AMS** (Content: MR, AMS).

As delivered condition

The SCHNEEBERGER guideways **MONORAIL MR, MONORAIL MZ, MONORAIL BM** and **MONORAIL AMS** are delivered in a suitable packaging and are protected with a corrosion protection coating for transportation:

- Carriages on the rails ready for installation.
- Additional wipers and lubrication plates installed on the carriage.
- Other accessories included in a separate package.
- 2-part steel plugs included in a separate package.
- Cover strip enclosed separate from the rail.
- Standard lubrication connection at the front center in the front plate, or optional lubrication connections prepared in accordance with the order and closed off with plastic plugs to prevent the ingress of dirt.
- Lubrication connections not required for use are closed.
- O-rings for the «lubrication connection top» separately packed.
- AMS measuring systems are assembled ready to plug-in.
- Electrical accessories and cables are packed with the mechanics.
- Product related mounting notes and operating instructions are delivered with the products.

Transportation and intermediate storage

The MONORAIL guideways and the measuring system are highly precise components, which have to be treated with care. As a protection against damage, the following instructions should be followed:

- Always store and transport MONORAIL guideways in their original packaging.
- Protect the guideways against impacts and dampness / humidity.
- Suspend long rails at several points with a crane during transportation.
- Protect MONORAIL rails with distance measuring systems from magnetic fields and from mechanical damage. Magnetic fields can destroy the magnetization of the measuring ruler.

Preparation for the installation

- Check the scope of supply of the components for completeness and with respect to their condition.
- Check the locating sides of the machine bed and mounting plate with regard to correct shape and locating accuracy in accordance with the guidelines in chapter 9.2 / 9.3 and if necessary rework them.
- Clean all locating sides thoroughly, remove any burrs and unevennesses with an oil stone (oil rubber).
- Take care, that the guideways and the mounting base have the same ambient temperature before and during the installation.
- Remove the corrosion protection from carriages and rails.
- Lightly oil the locating sides of the carriages and rails.

Installation alternatives

Described in the following are four typical installation alternatives (figure 1). These differ with respect to the location of the locating sides on the machine side and therefore to the lateral guide. They are described in detail in the separate **Mounting Instructions MONORAIL.**

Figure 1: Installation alternative (V 1 .. V 4)

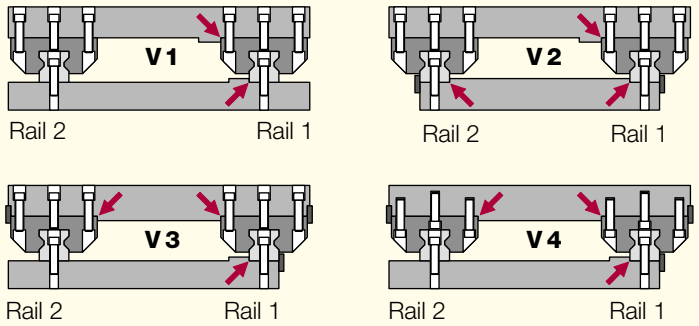

Handling the rails

When handling the rails, the following has to be observed:

- Always place the rails with their locating side on to the locating side of the mounting base. The locating side of the rail is that side of the rail opposite the one with the SCHNEEBERGER lettering and the type number.
- Always tighten the fixing screws alternately starting from the center of the rail, or multi-section rails (figure 2).
- Multi-section rails are numbered and marked on the rail joints (figure 3). Install the rails in such a way, that the numbers on the rail joints correspond to each other. The rail with the number 1 is designated as the reference rail.
- When installing multi-section rails without locating side, press the rail joints together by means of pins (figure 4). When installing multi-section rails with locating side always place it on to the locating side of the mounting base. In both cases, pay attention, that the rails touch.
- In the case of MONORAIL AMS, install the rail with the magnetic ruler as the rail 1. You can identify guideways of the type MONORAIL AMS by the designation on the rail and by the carriage with the scanning head.
  Note included instructions.

Figure 2: Alternate rail fixing starting from the center

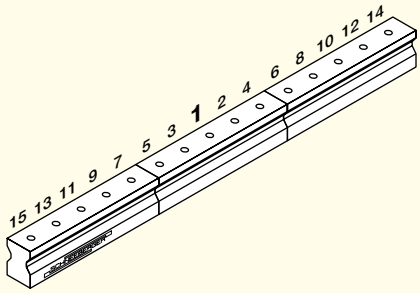

Figure 3: Numbering of the rails and rail joints in the case of multisection rails

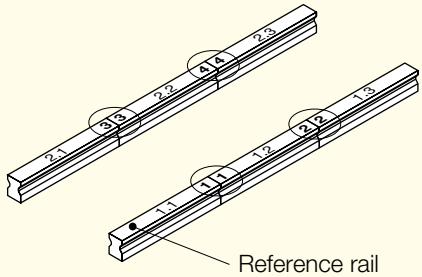

Figure 4: Fixing the rail joint with a clamping device

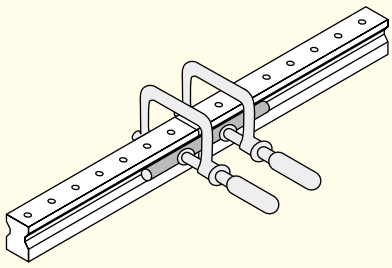

Handling the carriages

For handling the carriages, the following rules apply:

- Carriages and rails form a unit. Do **not** exchange carriages belonging to different rails. This is especially applicable to matched versions.
- If at all possible, always leave the carriages on the rail. For removing a carriage from the rail and when sliding it on again, always use a mounting rail MRM in the case of MONORAIL MR (figure 5). For MONORAIL BM a mounting rail MBM is recommended to facilitate the installation. It can be done without it when the carriages are carefully moved from and on the rail.
- Protect individual carriages against dirt. During transportation and storage always leave the carriages on a mounting rail MRM, or on the transportation protection in case of MONORAIL BM, as a protection against dirt and against the loss of bearing elements.
- In the case of carriages with a scanning head, always remove the scanning head before sliding the carriage on to a mounting rail MRM.
- Always place the locating side of the carriages against the locating side on the slide. The locating side of the carriage is the side with a ground finish.
- Any retrofitting work on the front plates for the purpose of changing lubrication connections should be carried out by SCHNEEBERGER.

Figure 5: Use of the mounting rail during installation work

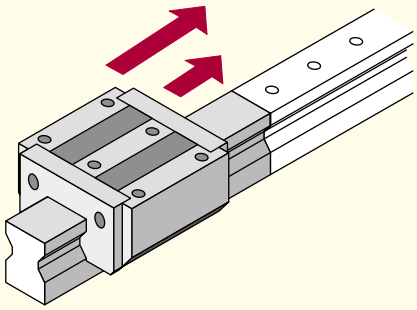

MONORAIL installation

- Prepare the mounting base and the guideways for installation in accordance with the preceding section.
- Install the MONORAIL guideways depending on the installation alternative in accordance with the **Installation Instructions MONORAIL**.
- Close the fixing bores of the rails with plugs or steel cover strip, refer to section «Installation Accessories».
- In the case of guideways with a distance measuring system, install the AMS scanning head, measuring electronics and extension cable in accordance with the **Installation Instructions MONORAIL AMS**.
- Slightly rub the rail surface with lubricant.
- If applicable, install the bellows.
- ⚠ Carry out the initial lubrication of the carriage – for this refer to chapter 3.6.

Installation accessories

The installation of the accessories is described in detail in the **Installation Instructions MONORAIL.** The following has to be observed:

- MONORAIL MR carriages with **additional wipers ZCN/ZCV** on rails with through holes and without a rail cover strip are supplied with an installation protection strip. This strip serves to protect the sealing lips during the installation and it must only be removed after the rail bores have been closed off.
- In the case of single carriages with **sheet metal wipers ASM** or **ABM,** release the wiper slightly before running it on to a rail. After running on, adjust the wipers so that there is a uniform gap in the running surface area. Then tighten the fixing screws again.
- Install the **cover strip MAB** or **BAB** (figure 6) in accordance with the installation instructions. In the case of cover strips in several parts, the individual parts are marked the same way as the rails. Install the cover strips so that the rail joints and cover strip joints are not above one another (do not coincide).
- Support the **cover strips** during transportation and storage along their whole length and never let them buckle.
- For the installation of **plastic**, resp., **brass** plugs, use a hammer with an intermediate plate (see figure 7). First place the plug on the rail bore. In doing so, pay attention to the parallel seating of the plug with respect to the rail surface. First tap the plug in lightly, check the seating again and remove any chips produced. Thereafter hammer the plug in until it is flush with the rail surface.
- Steel plugs **MRZ** are supplied in two pieces. First place the bushing onto the screw head, then insert the plug into the bushing. In doing so, pay attention to the parallel seating of the plug with respect to the rail surface. For pressing the plug in, use the hydraulic installation tool **MWH** (see figure 8).
- Install the **bellows FBM** resp. **FBB** in accordance with the Installation Instructions MONORAIL.

Figure 6: Installation of the cover strip

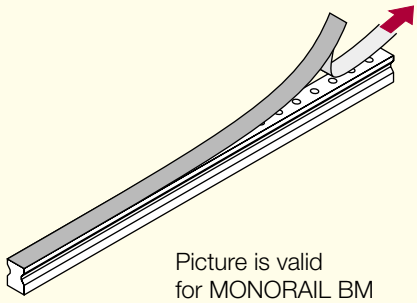

Figure 7: Installation of the plastic-/ brass plugs

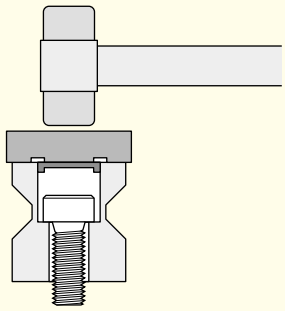

Figure 8: Installation tool MWH for 2-part steel plugs

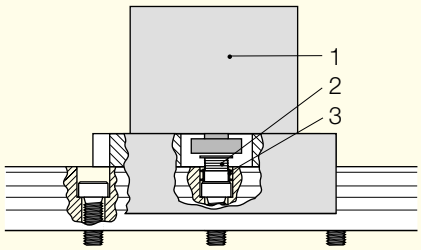

1 Hydraulic installation tool
2 Tapered steel plug
3 Seal ring

AMS installation

The installation of the MONORAIL rails with integrated measuring system is described in the **Installation Instructions MONORAIL AMS.** In addition, the following remarks have to be observed:

- Fix the MONORAIL AMS rails against a lateral stop.
- The rails in the case of MONORAIL AMS size 25 can only be attached from underneath.
- For the removal of the scanning head, additional clearance is required, especially in the case of AMS 25 (at least 2 mm above the scanning head).
- Pay attention to the diameters of the cable plugs (dia 28 mm).

In order to maintain the operability of the MONORAIL guideways during the demanded service lifetime, the following points must imperatively be noted:

- The MONORAIL linear guideways and the distance measuring system AMS are precision components. Therefore the guideways during transportation and storage have to be protected against shocks and humidity and the distance measuring system additionally against strong magnetic fields.

- The installation of the guideways has to be carried out properly and expertly in accordance with the instructions of the manufacturer; in particular, the rail bores have to be closed off flush with the rail surface.

- The profile rail guideways have to be adequately supplied with a lubricant, which is suitable for the movement and the load profile as well as adapted to the environmental conditions. For the selection of the lubricant, if so required a lubricant producer should be directly consulted.

- The compatibility of coolants and lubricants has to be checked and verified by the user, in order to preclude any detrimental influences on the linear guideway.

- The guideways should be protected against contamination with dirt, hot metal chips and any direct contact with coolants by means of covers or corresponding installation positions.

- Depending on the material to be machined, resp., the dirt produced and in cases, where coolant comes into contact with the linear guideways, it is indispensable, that additional wipers are installed in front of the front plates. In addition, shorter inspection intervals are also called for.

- In such case, where the linear guideways come into contact with hot metal chips, in addition the utilization of metal wipers is recommended.

- The wipers on the ends of the MONORAIL carriages have to be examined for wear at regular time intervals and if necessary replaced. This is also applicable for additional wipers.

SWITZERLAND

W. Schneeberger AG
CH-4914 Roggwil/BE
Phone 062 918 41 11
Fax 062 918 41 00

E-Mail:
info-ch@schneeberger.com
www.schneeberger.com

GERMANY

Schneeberger GmbH
75339 Höfen/Enz
Phone 07081 782-0
Fax 07081 782-124

E-Mail:
info-d@schneeberger.com

ITALY

Schneeberger S.p.A
21021 Angera VA
Phone 0331 93 20 10
Fax 0331 93 16 55

E-Mail:
info-i@schneeberger.com

FRANCE

Schneeberger
Technique Linéaire SARL
91222 Brétigny-sur-Orge
Phone 01 69 88 50 00
Fax 01 60 84 96 02

E-Mail:
info-f@schneeberger.com

USA

Schneeberger Inc.
Bedford, MA 01730
Phone +1 781-271-0140
+1 800-854-6333
Fax +1 781-275-4749

E-Mail:
info-usa@schneeberger.com